OMRON

Uninterruptible Power Supply (UPS)

POWLI BU50SW/BU75SW/BU100SW/BU150SW

Instruction Manual

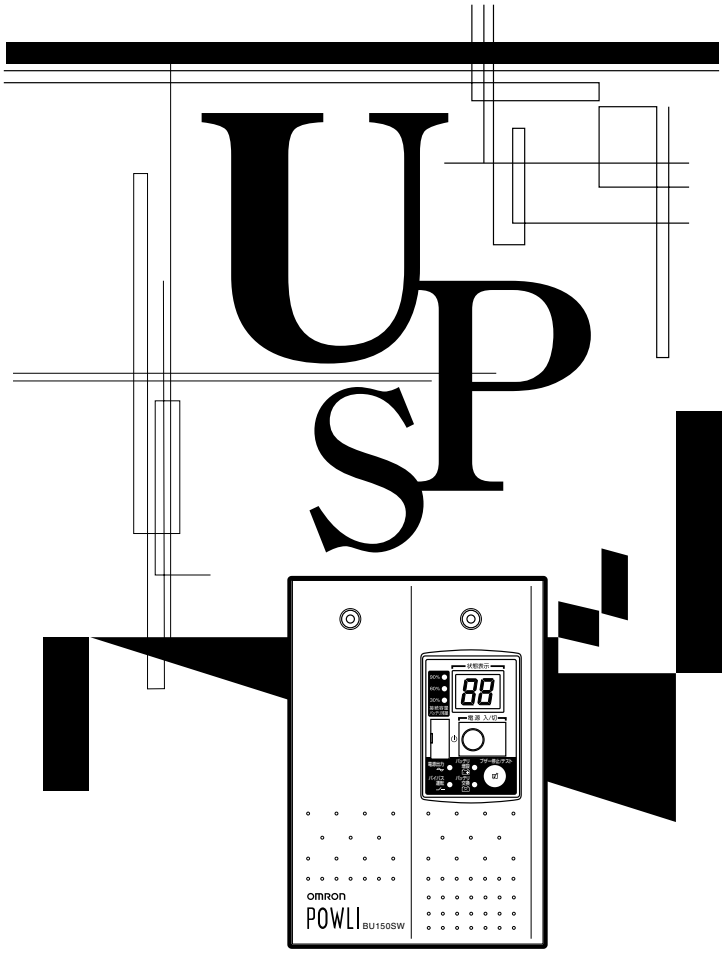

- This manual provides important safety-related information. Thoroughly read and understand this manual before installing and using the product.
- Keep this manual in a convenient location so that you can refer to it whenever necessary.

Introduction

Features of this product

Thank you for purchasing Omron's Uninterruptible Power Supply (UPS).

- The UPS protects computers and other devices from power failures, voltage variations, instantaneous voltage drops, and surge voltage such as that caused by lightning (a phenomenon in which extraordinary high voltage occurs instantaneously).
- Under normal conditions, it converts the commercial power to a direct current once, reconverts it to a stable AC sine wave, and outputs it.
  When a commercial power failure is detected, the unit switches to battery supply to provide continuous sine wave output. This is especially suitable for use where power supply conditions are poor (for example, when there are large variations in voltage).
- The output capacity is 500VA/350W for BU50SW, 750VA/500W for BU75SW, 1000VA/700W for BU100SW and 1500VA/1050W for BU150SW.

Notes on the use of the Backup Power Supply

- This product is designed and manufactured for use for OA equipment such as personal computers.
  Do not use it when very high reliability and safety are required as listed below.
  - Medical equipment that may cause death directly
  - Applications that may cause injury (applications that directly affect the operation and control of planes, ships, railroads, elevators, and so on)
  - Applications that are always subjected to vibration such as cars and ships
  - Applications in which a failure of this product may cause significant damage or effect to the society and public (important computer systems, main communication equipment, public transportation systems, and so on)
  - Equipment with the same level of importance
- For equipment that greatly affects the safety of people and maintaining public functions, special considerations related to operation, maintenance, and management must be taken such as duplicating the system and emergency power generation facilities.
- Observe the contents of this manual such as the use conditions and environments.
- When you want to use this product for an important system that requires very high reliability, contact us;_____
- Do not modify/alter this product.

Disclaimers

We are not liable for any damage or secondary damage resulting from the use of our product, including malfunction and failure of equipment, connected devices, or software.

- Make sure to read the safety precautions before using the unit.
- In the event you transfer or sell this unit to a third party, please include all of the documentation that came with this unit. This is to ensure that the unit is used in line with the conditions described in the included documentation.
  - This manual contains important safety-related information. Please read and understand the contents of the manual before beginning operation.
    If you discover any omissions or errors in the manual, please contact the shop of purchase.

- Windows is the registered trademark of Microsoft Corporation in the United States and/or other countries.
- The names of other companies and products mentioned herein are the trademarks or registered trademarks of their respective owners.
- Note on user registration Please fill out the required items on the included user registration card and send it to our customer support center.

IMPORTANT SAFETY INSTRUCTION

1. SAVE THESE INSTRUCTIONS.

This manual contains important instructions for BU50SW/BU75SW/BU100SW/BU150SW that should be followed when using the UPS and batteries.

2. SYMBOL

⏚ This symbol indicates earth ground.

I This symbol indicates turning on UPS.

◯ This symbol indicates turning off UPS.

3. INTERNAL BATTERY

Internal battery voltage is 24V DC for BU50SW/BU75SW/BU100SW, 36V DC for BU150SW.

4. TEMPERATURE RATING

The maximum ambient temperature of the UPS is 40°C.

5. ENVIRONMENT

The unit is intended for installation in a temperature controlled, indoor area free of conductive contaminants.

INSTRUCTIONS DE SÉCURITÉ IMPORTANTES

1. CONSERVER CES INSTRUCTIONS.

Ce manuel contient des instructions importantes pour le BU50SW/ BU75SW/BU100SW/BU150SW qui doivent être respectées lors de l'utilisation de l'onduleur et des batteries.

2. SYMBOLE

⏚ Ce symbole indique la terre.

I Ce symbole indique la mise sous tension de l'ASC.

◯ Ce symbole indique la mise hors tension de l'ASC.

3. BATTERIE INTERNE

La tension de la batterie interne est de 24V DC pour BU50SW/BU75SW/ BU100SW et de 36V DC pour BU150SW.

4. TEMPÉRATURE NOMINALE

La température ambiante maximale de l'ASC est de 40ºC.

5. ENVIRONNEMENT

L'appareil est conçu pour une installation dans un espace intérieur à la température contrôlée et exempt de contaminants conducteurs.

Procedure from installation to operation

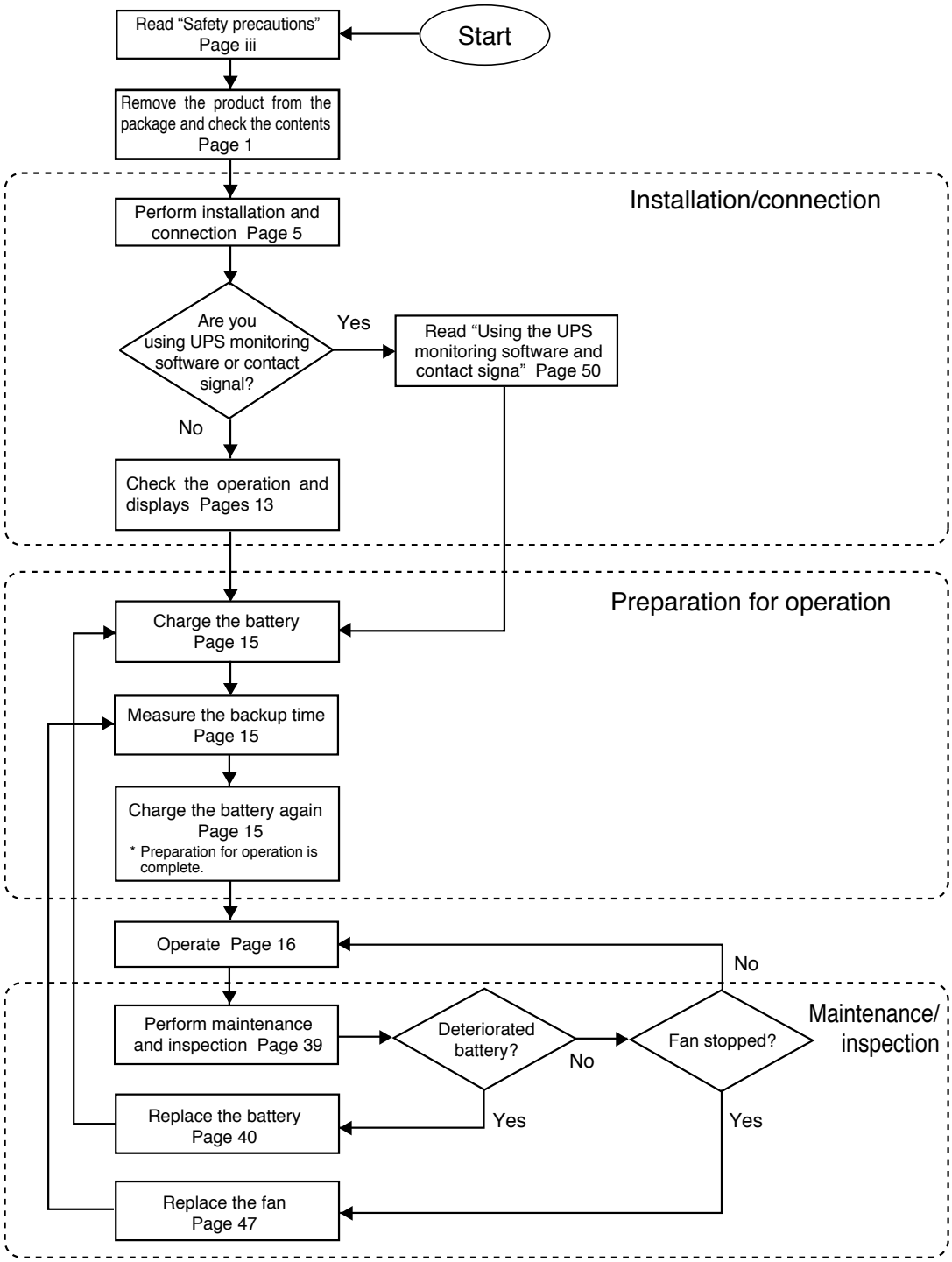

■ Table of Contents ■

Safety precautions

Important information for safe operation is described.
Be sure to read it before installation and start of use.

- The safety symbols and their meaning used in this manual are as follows:

Warning	Misuse may cause death or serious injury.
Caution	Misuse may cause injury or property damage.

* Property damage means damage to houses/household effects, livestock, and pets.

: Indicates prohibition. For example, indicates that disassembly is prohibited.

: Indicates obligation. For example, indicates that grounding is necessary.

Note that events categorized as a caution required matter also may cause more serious results under certain conditions.

Warning

Do not use this unit when very high reliability and safety are required as listed below. This unit is designed and manufactured for use with OA equipment such as personal computers.

- Medical equipment or system that may cause death directly.
- Applications that directly affect the safety of people (For example, the operation and control of cars and elevators).
- Applications in which a failure of the unit may cause significant damage to the society and public (For example, essential computer systems and main communication equipment.)
- Applications with the same level of importance.

Caution (for installation and connection)

Carry the unit considering its weight and balance, and place it on a stable and robust base.

- Dropping or toppling the unit may cause injury.
- The weight of this unit is approximately: 13 kg (BU50SW/BU75SW)
  15.5 kg (BU100SW)
  16.5 kg (BU150SW)
- If you drop the unit, stop using it and have it inspected and repaired.
  For repair, contact us; ____

Keep plastic package bags out of reach of children.

- Children may suffocate if they place their heads into plastic bags.

Make sure to connect the unit's AC input plug to a commercial power source with rated input voltage (100 to 120V AC) and 50/60Hz frequency.

- Connecting to a wall outlet (commercial power) with a different voltage or frequency may result in a fire .
- The unit may fail.

Do not connect devices such as dryers, which have a half-wave rectifier that allows only half-cycle AC power to flow through.

- Overcurrent may damage the UPS.

Do not connect devices having a half-wave rectifier that allows only half-cycle AC power to flow through, such as dryers or some solenoid valves.

- Overcurrent may damage the UPS.

⚠ Caution (for installation and connection)

Connect the unit to a wall outlet with the proper current capacity, as follows: 8A or more (BU50SW), 10A or more (BU75SW), 12A or more (BU100SW), or 16A or more (BU150SW).

- Otherwise, the power cord may be heated.
- When equipment with the maximum output capacity is connected, a maximum current of 8A (BU50SW), 10A (BU75SW), 12A (BU100SW), or 16A (BU150SW) flows.

Provide secure grounding.

- For a 3P wall outlet, directly connect the AC input plug of the unit to it. A failure or leak that occurs when the unit is not properly grounded may result in electric shock.
- When you use a 3P-2P conversion plug for AC input plug, be sure to perform grounding before connecting the AC input plug into a wall outlet (commercial power).
  Do not disconnect the grounding before disconnecting the AC input plug from a wall outlet (commercial power).

Do not disassemble, repair, or modify the unit.

- Doing so may cause an electric shock or a fire.

Do not install the unit in other than specified orientations.

- Dropping or toppling the unit may cause injury.
- If you install the unit in an orientation other than specified, the unit cannot be protected from a battery fluid leakage.

Do not use the unit where the maximum temperature exceeds 40°C.

- The battery becomes weak rapidly, which may cause a fire.
- Doing so may cause a failure or malfunction of the unit.

Do not exceed the ranges specified for environmental conditions during use/storage.
Do not install or store the unit in the places listed below.

- Do not store in places where the humidity is lower than 10% or higher than 90%.
- Do not use in places where the humidity is lower than 25% or higher than 85%.
- Do not install/store the unit in closed places such as cabinets with no clearance, places where there is flammable or corrosive gas, places with large amounts of dust, places exposed to direct sunlight, places exposed to shock or vibration, or outdoors.
- Installation or storing the unit in such a place may cause a fire.

Do not connect equipment that exceeds the output capacity of the unit. You can use a plug strip to connect additional devices, but do not connect devices that exceed the current capacity of the plug strip.

- The current protection of the unit may operate, which may stop the output.
- The wiring of the plug strip heats up, which may cause a fire.

Do not pinch or sharply bend the cable.
Do not fold or knot the cable.

- Doing so may cause the cable to be damaged or heated, which may cause an electric shock or a fire.
- If the cable is damaged, stop using the unit and have the cable repaired.
  For repair, contact us; ____

All of the included accessories are designed to be used exclusively with the unit. Do not use the accessories with other devices.

- Doing so may compromise the safety of devices.

⚠ Caution (for installation and connection)

- This UPS utilizes voltages that may be hazardous. Do not attempt to disassemble the unit The unit contains no user serviceable parts. Only factory service personnel may perform repairs.
- Connection to any other type of receptacle other than a two-pole,three-wire grounded receptacle may result in shock hazard as well as violate local electical codes.
- Do not allow liquids or any foreign object to enter the UPS. DO not place beverages or any other liquid-containing vessels on or near the unit.
- This unit intended for installation in a controlled environment (temperature controlled, indoor area free of conductive contaminants).Avoid installing the UPS in locations where there is standing or running water,or excessive humidity.
- Do not attach a power strip or surge suppressor to the UPS.
- Do not attach non-computer-related items,such as medical equipment,life-support equipment,microwave ovens,or vacuum cleaners to UPS.
- With the installation of the equipment it should be prevented, that the sum of the leakage current of the UPS and the connected consumer does not exceed 3.5mA.

Do not block the air vents on the side and rear of the unit.

- Doing so will cause the internal temperature to rise, which may cause the unit to fail and the battery to deteriorate.
- Leave at least 5 cm of space between the vent and the wall.

Do not connect a standalone transformer such as a voltage transformer or isolating transformer to the output side.

- Overcurrent may damage the UPS.
- There is no problem in connecting a transformer to the input side.

Do not connect devices that cannot be used with commercial power supply.

- When the unit's power switch is turned ON and an error occurs with the connected device, bypass operation is performed and commercial power supply is supplied as is to the connected devices.

When a 15A plug (NEMA5-15P) is used with BU150SW, the maximum capacity connectable to output is approximately 1100VA/950W.

- Doing so will cause the internal temperature to rise, which may cause the unit to fail and the battery to deteriorate.
- When the "15A input exceeded" display appears (OL or E0 is displayed on the status indicator), replace the input plug with a 20A input plug.

When replacing the input plug for the BU150SW, perform connection as specified, making sure to properly match the plug terminals with the appropriate wire colors.

- Refer to "Using a 20A plug" on page 16.
- Failure to do so may result in electric shock or ground fault.

For PLUGGABLE EQUIPMENT, the socket-outlet shall be installer near the equipment and shall be easily accessible.

⚠ Caution (for use)

Do not allow the unit to come in contact with water.

- Doing so may cause an electric shock or a fire.
- If the unit becomes wet, immediately stop using it, disconnect the AC input plug from the wall outlet, and have the unit inspected and repaired.
  For repair, contact us:_____

When the battery is dead, replace it immediately or stop using the unit.

- Continuing the use of it may cause fire or electric shock due to a fluid leak.

Ambient temperature	Expected life
20°C	4 to 5 years
30°C	2 to 2.5 years

* The values in the table are the expected life under standard use conditions and are not guaranteed.

Wipe the AC input plug clean of dirt with a dry cloth occasionally.

- Accumulated dust may cause a fire.

Do not use the unit in a closed place and do not cover the unit.

- Doing so may cause abnormal heating or a fire.

If you notice abnormal sound or smell, smoke, or leakage from the inside, immediately turn off the power switch and disconnect the AC input plug from a wall outlet (commercial power).

- Using the unit under such conditions may cause a fire.
- If you notice such a condition, stop using the unit and contact us at _____ for inspection and repairs.
- Use the unit under the conditions in which you can immediately disconnect the AC input plug from a wall outlet (commercial power) in the case of an abnormal event.

If fluid leaks from the unit, do not touch the fluid.

- Doing so may cause blindness or burns.
- If the fluid contacts your eyes or skin, wash it out with lots of clean water and consult your doctor.

Do not place objects heavier than 25kg on the unit, and do not drop heavy objects onto the unit.

- Doing so may cause distortion/damage to the case or a failure of the internal circuit, which may cause a fire.

⚠ Caution (for maintenance)

When maintaining the connected equipment, turn OFF the power switch and disconnect the AC input plug.

- Even if you disconnect the AC input plug while the UPS is operating, the power output of this unit does not stop and power is supplied from the outlet during a power failure.

Do not disassemble, repair, or modify the unit.

- Doing so may cause an electric shock or a fire.

If fluid leaks from the unit, do not touch the fluid.

- Doing so may cause blindness or burns.
- If the fluid contacts your eyes or skin, wash it out with lots of clean water and consult your doctor.

Do not throw the unit into fire.

- The lead battery in the unit may explode, or leak dilute sulfuric acid.

Do not insert metal objects into the power supply output receptacles of the UPS.

- Doing so may result in electric shock.

Do not insert metal objects into the battery connectors.

- Doing so may result in electric shock.

⚠ Caution (for battery replacement)

Perform replacement on a stable and flat place.

- Handle the battery carefully so that you do not drop it.
- Not doing so could cause injury or burns due to liquid (acid) leakage.

Use a specified battery for replacement.

- Not doing so may cause a fire.
- Product model: BP70XS (Replacement battery pack for BU50SW/BU75SW)
  BP100XS (Replacement battery pack for BU100SW)
  BP150XS (Replacement battery pack for BU150SW)

Do not replace the battery in a place where there is flammable gas.

- Spark may occur when connecting the battery, which may cause an explosion or fire.

If fluid (dilute sulfuric acid) leaks from the battery, do not touch the fluid.

- Doing so may cause blindness or burns.
- If it contacts your eyes or skin, wash it out with lots of clean water and consult your doctor.

Do not disassemble or modify the battery.

- Doing so could cause dilute sulfuric acid leak, which could cause blindness and burns.

Do not drop the battery and do not expose it to strong impact.

- Dilute sulfuric acid may leak.

Do not short the battery with metal objects.

- Doing so could cause an electric shock, fire or burn.
- Some electrical energy still remains inside the spent battery.

⚠ Caution (for battery replacement)

Do not put the battery into fire and do not break it.

- The battery may explode or leak dilute sulfuric acid.

Do not use a new battery and an old battery at the same time.

- Dilute sulfuric acid may leak.

- A battery can present a risk of electrical shock and high short circuit current.The following precautions should be observed when working on batteries:
  1) Remove watches, rings, or other metal objects from the hands.
  2) Use tools with insulated handles.
  3) Wear rubber gloves and boots.
  4) Do not lay tools or metal parts on top of batteries.
  5) Disconnect charging source prior to connecting or disconnecting batteries terminals.
- Servicing of batteries should be performed or supervised by personnel knowledgeable of batteries and the required precautions. Keep unauthorized personnel away from batteries.

Notes

When moving the unit from a cold place to a warm place, leave it for several hours before using it.

- If the unit is promptly turned ON after being moved to a warmer place, condensation may form inside the unit and cause it to fail.

Charge the battery for at least 8 hours soon after purchasing the unit.

- If you do not use the unit for a long time after the purchase, the battery may deteriorate and the battery may become unusable.
- To charge a battery, connect the AC input plug of the unit to a wall outlet (commercial power).

When storing the unit, charge the battery for at least 8 hours and turn OFF the power switch.
Recharge the battery for at least 8 hours every 6 months when the storage tempareture is 25°C or less, or every 2 months when the storage temperture is 40°C or less.

- Even if the unit is not used, the battery gradually discharges, and if it is left for a long time, it goes into an over discharge state.
  The backup time may become shorter or the battery may become unusable.
- We recommend keeping the temperature 25°C or less when storing the unit for long periods of time.
- Turn OFF the unit's power switch when storing it.
- Before storing an additional battery, charge it for at least 24 hours.

Do not short the output lines of the unit to each other, and do not short the output lines to the ground.

- The unit may fail.

Do not connect the AC input plug of the unit to its Power Supply Output Receptacle during the Battery Mode.

- The unit may fail.

Do not connect a page printer (such as a laser printer) to the unit.

- The unit repeatedly and frequently switches between Commercial Power Mode and Battery Mode, which may shorten the life of the battery.
- The page printer has a large peak current, so an excess of the connection capacity or a power failure due to instantaneous voltage drop may be detected.

Check system operation beforehand if the unit is used in combination with a device whose power supply frequency fluctuates widely, such as a personal electric generator.

- The unit automatically recognizes the input power frequency when input power is supplied.If the unit is connected when the input power frequency is not stable at the rated level, the unit may misidentify the power supply frequency and may fail to operate normally. (If the unit is in operation, changing from commercial power supply to another power supply source, such as generating equipment, will cause no problem.)

Do not install or store the unit in a place exposed to direct sunlight.

- The rise of temperature may cause the built-in battery to deteriorate rapidly and become unusable.

Do not perform a withstand voltage test.

- The input circuit has a built-in surge absorption device. A withstand voltage test may break it.
- When performing an insulation resistance test, use the 250V DC range.

Notes

Before stopping the commercial power to the unit, turn OFF the power switch of the unit.

- The unit enters Battery Mode when commercial power is stopped. If you frequently use the unit in Battery Mode, the battery life may be significantly shortened.

Check the operation beforehand if the unit is used in any mode other than "Output 100V mode".

- In Battery Mode, the maximum voltage (peak voltage) of output (rectangular wave) may be lower than the maximum voltage in Commercial Power Mode. For this reason, some connected devices may fail to operate normally.

If this unit is used with an inductive device such as a coil, transformer or motor, check the operation beforehand.

- With some types of devices, the effect of inrush current may cause this unit to stop operating properly.

Take measures for handling unforeseen accidents, such as data backup and system redundancy.

- The output may stop when there is a circuit failure in the UPS.

This unit uses lead acid batteries,

- Which are a valuable recyclable resource. Please recycle.

Explanation

Usual operation

- You may either leave the power switch of the unit ON (operation status) or turn it OFF each time when stopping the connected system. Choose whichever operation method is more convenient. We recommend turning OFF the power switch when you do not use connected devices for a long time.
- The battery can be charged once the AC input plug of the unit is connected to a wall outlet (commercial power).

Quitting Battery Mode

- If a power failure lasts for an extended period of time, the battery discharges and power output from the unit stops. Shut down your computer after performing appropriate procedures (for example, saving data) while the unit is still supplying power.

Rebooting

- If the battery discharges completely during a power failure, the unit stops. After recovery from the power failure, the unit automatically restarts and supplies power. If you do not want to restart the connected devices, turn OFF the power switch of either the unit or the connected devices.

See also Setting switch 2 can be used to select whether or not auto restart is performed.
Page 32

Scheduled operation using the UPS monitoring software

- When performing scheduled operation in which the UPS is stopped and a device such as a breaker is used to stop the UPS at the same time that commercial power stops, specify a period of no more than 3 months for the start of the next operation.
  If you specify a period longer than 3 months, the internal timer is reset and the scheduled operation does not start. Note that this period reduces to approximately half when the battery is dead. If a period of 3 months is exceeded, you start operation by supplying commercial power and pressing the start switch. However, if the battery is dead, you may not be able to start operation.
  In this case, replace the battery according to the instructions in "6-2 Replacing the battery" on page 40.

Consignes de sécurité

Des informations importantes pour un fonctionnement en toute sécurité sont données.
À lire impérativement avant de commencer l'installation et l'utilisation.

● Les symboles de sécurité et leur signification utilisés dans ce manuel sont les suivants :

Avertissement	Une mauvaise utilisation peut entraîner la mort ou des blessures graves.
Attention	Une mauvaise utilisation peut entraîner des blessures ou des dommages matériels.

* Les dommages matériels signifient les dommages aux habitations / effets mobiliers, bétail et animaux domestiques.

: Indique une interdiction. Par exemple, indique que le démontage est interdit.

: Indique une obligation. Par exemple, indique que la mise à la terre est nécessaire.

Noter que les événements classés comme mise en garde réglementaire peuvent également avoir des conséquences plus graves dans certaines conditions.

Avertissement

Ne pas utiliser cet appareil si une très haute fiabilité ou sécurité est nécessaire comme dans les cas indiqués ci-dessous. Cet appareil a été conçu et fabriqué pour être utilisé avec des équipements d'automation informatique comme des ordinateurs personn.

- Équipement ou système médical pouvant directement entraîner la mort.
- Applications qui affectent directement la sécurité des personnes (Par exemple, le fonctionnement et le contrôle des voitures et des ascenseurs).
- Applications pour lesquelles une défaillance de l'appareil peut causer des dommages importants sur la société et le public (Par exemple, systèmes informatiques essentiels ou matériel de communication principal.)
- Applications d'un niveau d'importance similaire.

Attention (pour l'installation et le raccordement)

Transporter l'appareil en tenant compte de son poids et de son équilibre, et le placer sur un support stable et robuste.

- Une chute ou un renversement de l'appareil peut causer des blessures.
- Le poids de cette unité est d'environ : 13 kg (BU50SW/BU75SW)
  15,5 kg (BU100SW)
  16,5 kg (BU150SW)
- En cas de chute de l'appareil, cesser de l'utiliser et le faire inspecter et réparer.
  Pour toute réparation, nous contacter au : ____

Garder les sacs en plastique d'emballage hors de portée des enfants.

- Les enfants peuvent s'étouffer s'ils placent leur tête dans un sac en plastique.

S'assurer de brancher la fiche d'entrée AC de l'appareil à une alimentation secteur avec une tension d'entrée nominale (100 V à 120 V AC) et une fréquence de 50/60Hz.

- Le branchement à une prise murale (alimentation secteur) d'une tension ou fréquence différente peut provoquer un incendie.
- L'unité peut prendre feu.

Ne pas brancher d'appareils tels que des séchoirs qui ont un redresseur mono-alternance qui ne permet qu'au demi-cycle d'alimentation AC de les parcourir.

- La surtension peut endommager l'ASC.

⚠ Attention (pour l'installation et le raccordement)

Ne pas brancher des appareils tels que des séchoirs, certaines électrovannes, etc., qui ont un redresseur mono-alternance qui ne permet qu'au demi-cycle d'alimentation AC de les parcourir.

- La surtension peut endommager l'ASC.

Brancher l'appareil à une prise murale avec la puissance électrique appropriée suivante : 8A ou plus (BU50SW), 10A ou plus (BU75SW), 12A ou plus (BU100SW) ou 16A ou plus (BU150SW).

- Sinon, le cordon d'alimentation risque de chauffer.
- Lorsqu'un équipement d'une puissance de sortie maximale est branché, un courant maximum de 8A (BU50SW), 10A (BU75SW), 12A (BU100SW) ou 16A (BU150SW) est délivré.

Assurer une mise à la terre correcte.

- Pour une prise de courant 3P, y brancher directement la fiche d'entrée AC de l'appareil. Une panne ou une fuite se produisant lorsque l'appareil n'est pas correctement relié à la terre peut provoquer un choc électrique.
- "Lors de l'utilisation d'une fiche de conversion 3P-2P pour la fiche d'entrée AC, s'assurer de bien effectuer la mise à la terre avant de brancher la fiche d'entrée AC à une prise murale (alimentation secteur).
  Ne pas débrancher la mise à la terre avant de débrancher la fiche d'entrée AC de sa prise murale (alimentation secteur)."

Ne pas démonter, réparer ou modifier l'appareil.

- Cela peut provoquer un choc électrique ou un incendie.

Ne pas installer l'appareil dans une autre position que celles indiquées.

- Une chute ou un renversement de l'appareil peut causer des blessures.
- Si l'appareil est installé dans une position autre que celles spécifiées, il ne sera plus à l'abri des fuites de liquide de batterie.

Ne pas utiliser l'appareil lorsque la température maximale dépasse 40°C.

- La batterie s'affaiblit rapidement, ce qui peut provoquer un incendie.
- Cela peut provoquer une panne ou un dysfonctionnement de l'appareil.

Ne pas dépasser les limites spécifiées comme conditions environnementales lors de l'utilisation / stockage.
Ne pas installer ni ranger l'appareil dans les endroits indiqués ci-dessous.

- Ne pas entreposer dans des endroits où l'humidité est inférieure à 10% ou supérieure à 90 %.
- Ne pas utiliser dans des endroits où l'humidité est inférieure à 25% ou supérieure à 85%.
- Ne pas installer/stocker l'appareil dans des endroits fermés tels que des armoires sans dégagement, en présence de gaz inflammables ou corrosifs, des endroits soumis à de grandes quantités de poussière, des endroits exposés aux rayons directs du soleil, des endroits exposés à des chocs ou à des vibrations, ou à l'extérieur.
- Installer ou ranger l'appareil dans un endroit de ce type peut provoquer un incendie.

Ne pas brancher d'équipement dépassant l'alimentation de sortie de l'appareil. Il est possible d'utiliser une multiprise pour brancher des périphériques supplémentaires, mais ne pas brancher de périphériques dépassant la capacité électrique de la multipri.

- La protection contre les surintensités de l'appareil peut se déclencher, ce qui peut empêcher la sortie.
- Le câblage de multiprise chauffe, ce qui peut provoquer un incendie.

⚠ Attention (pour l'installation et le raccordement)

Ne pas pincer ou fortement plier le câble.
Ne pas plier ou nouer le câble.

- Cela peut endommager ou faire chauffer le câble, ce qui peut provoquer un choc électrique ou un incendie.
- Si le câble est endommagé, cesser d'utiliser l'appareil et faire réparer le câble.
  Pour toute réparation, nous contacter au : ____

Tous les accessoires inclus ont été conçus pour être utilisés exclusivement avec l'appareil. Ne pas utiliser ces accessoires avec d'autres appareils.

- Cela peut compromettre la sécurité des équipements.

- Cette ASC utilise des tensions qui peuvent être dangereuses. Ne pas tenter de démonter l'appareil. L'appareil ne contient aucune pièce réparable par l'utilisateur. Seul le personnel de l'usine est habilité à effectuer des réparations.

- Le branchement à tout autre type de prise qu'une prise dotée de 2 pôles secteur et 3 fils avec mise à la terre peut entraîner des risques de choc électrique et violer les codes électriques locaux.

- Ne laisser aucun liquide ou tout autre objet étranger pénétrer dans l'ASC. Ne JAMAIS placer de boissons ou autres récipients contenant du liquide sur ou près de l'appareil.

- Cet appareil a été conçu pour être installé dans un environnement contrôlé (température contrôlée, espace intérieur exempt de contaminants conducteurs). Éviter d'installer l'ASC dans des endroits où se trouve de l'eau stagnante, courante ou une humidité excessive.

- Ne pas fixer une multiprise ou un parasurtenseur à l'ASC.

- Ne pas brancher d'éléments sans rapport avec l'informatique, tels que des équipements médicaux, des équipements d'assistance à la vie, des fours à micro-ondes ou des aspirateurs à l'ASC.

- Lors de l'installation de l'équipement, s'assurer que la somme du courant de fuite de l'ASC et du récepteur raccordé ne dépasse pas 3,5 mA.

Ne pas obstruer les bouches d'aération sur le côté et à l'arrière de l'appareil.

- Cela peut provoquer une augmentation de la température interne, ce qui peut entraîner une panne de l'appareil et une détérioration de la batterie.
- Laisser au moins 5 cm d'espace entre l'aération et le mur.

Ne pas connecter un transformateur autonome tel qu'un transformateur de tension ou un transformateur d'isolement du côté sortie.

- La surtension peut endommager l'ASC.
- Le branchement d'un transformateur du côté entrée ne pose pas de problème.

Ne pas connecter des périphériques qui ne peuvent pas être utilisés avec une alimentation secteur.

- Lorsque l'interrupteur d'alimentation de l'appareil est allumé et qu'une erreur se produit avec l'équipement branché, une opération de dérivation est effectuée et l'alimentation secteur est fournie telle quelle aux équipements branchés.

Lorsqu'une prise 15 A (NEMA5 -15P) est utilisée avec le BU150SW, la puissance maximale raccordable à la sortie est d'environ 1100VA/950W.

- Cela peut provoquer une augmentation de la température interne, ce qui peut entraîner une panne de l'appareil et une détérioration de la batterie.
- Lorsque l'affichage "entrée 15A dépassée" apparaît (ou qu'DL ou E0 est affiché sur l'indicateur d'état), remplacer la fiche d'entrée par une fiche d'entrée 20A.

⚠ Attention (pour l'installation et le raccordement)

Lors du remplacement de la fiche d'entrée pour le BU150SW, réaliser une connexion comme spécifié, en s'assurant de bien faire correspondre les bornes enfichables avec les couleurs des fils appropriées.

- Consulter "Utilisation d'une prise 20A" à la page 16.
- Ne pas le faire peut entraîner un choc électrique ou une faute à la terre.

Pour les ÉQUIPEMENTS BRANCHABLES, la prise électrique doit être installée à proximité de l'équipement et être facilement accessible.

⚠ Attention (pour l'utilisation)

Ne pas laisser l'appareil entrer en contact avec de l'eau.

- Cela peut provoquer un choc électrique ou un incendie.
- Si l'appareil est mouillé, cesser immédiatement de l'utiliser, retirer la fiche d'entrée AC de la prise murale, et faire inspecter et réparer l'appareil.
  Pour les réparations, nous contacter au : _____

Lorsque la batterie est morte, la remplacer immédiatement ou cesser d'utiliser l'appareil.

- Continuer l'utilisation pourrait causer un incendie ou une décharge électrique suite à une fuite de liquide.

Température ambiante	Durée de vie prévue
20°C	4 à 5 ans
30°C	2 à 2,5 ans

* Les valeurs du tableau sont la durée de vie prévue dans les conditions normales d'utilisation mais ne sont pas garanties.

Essuyer régulièrement les saletés de la fiche d'entrée AC avec un chiffon sec.

- Une accumulation de poussière peut provoquer un incendie.

Ne pas utiliser l'appareil dans un endroit fermé et ne pas le couvrir.

- Cela peut provoquer un échauffement anormal ou un incendie.

En présence d'un son ou odeur anormale, de fumée ou de fuite depuis l'intérieur, couper immédiatement l'interrupteur d'alimentation et débrancher la fiche d'entrée AC de la prise murale (alimentation secteur).

- L'utilisation de l'appareil dans ces conditions peut provoquer un incendie.
- En cas de constatation d'un tel état, cesser d'utiliser l'appareil et nous contacter au _____ pour inspection et réparation.
- Utiliser l'appareil dans des conditions permettant d'immédiatement débrancher la fiche d'entrée AC de la prise murale (alimentation secteur) en cas d'événement anormal.

Si des fuites de liquide depuis l'appareil se produisent, ne pas toucher ce liquide.

- Cela peut provoquer la cécité ou des brûlures.
- Si le liquide entre en contact avec les yeux ou la peau, rincer abondamment à l'eau claire avant de consulter un médecin.

Ne pas placer d'objet de plus de 25 kg sur l'appareil, et ne pas laisser tomber des objets lourds sur l'appareil.

- Cela peut provoquer une altération/dommages du boîtier ou une panne du circuit interne, ce qui peut provoquer un incendie.

⚠ Attention (pour l'entretien)

Lors de l'entretien de l'équipement connecté, couper l'interrupteur d'alimentation et débrancher la fiche d'entrée AC.

- Même si la fiche d'entrée AC est débranchée alors que l'ASC fonctionne, l'alimentation de sortie de l'appareil n'est pas interrompue et il est alimenté à partir de la prise lors d'une panne de courant.

Ne pas démonter, réparer ou modifier l'appareil.

- Cela peut provoquer un choc électrique ou un incendie.

Si des fuites de liquide depuis l'appareil se produisent, ne pas toucher ce liquide.

- Cela peut provoquer la cécité ou des brûlures.
- Si le liquide entre en contact avec les yeux ou la peau, rincer abondamment à l'eau claire avant de consulter un médecin.

Ne pas jeter l'appareil au feu.

- La batterie au plomb dans l'appareil peut exploser ou laisser fuir de l'acide sulfurique dilué.

Ne pas insérer d'objets métalliques dans les prises de sortie d'alimentation électrique de l'ASC.

- Cela peut provoquer un choc électrique.

Ne pas insérer d'objets métalliques dans les connecteurs de la batterie.

- Cela peut provoquer un choc électrique.

⚠ Attention (pour le remplacement de la batterie)

Effectuer le remplacement à un endroit stable et plat.

- Manipuler soigneusement la batterie afin de ne pas la laisser tomber.
- Ne pas le faire peut entraîner des blessures ou des brûlures dues au liquide (acide) de fuite.

Utiliser une batterie spécifiée pour le remplacement.

- Ne pas le faire peut provoquer un incendie.
- Modèle du produit: BP70XS (Batterie de rechange pour BU50SW/BU75SW)
  BP100XS (batterie de rechange pour le BU100SW)
  BP150XS (batterie de rechange pour le BU150SW)

Ne pas changer la batterie en présence de gaz inflammable.

- Une étincelle peut se produire lors de la connexion de la batterie, ce qui peut provoquer une explosion ou un incendie.

Si du liquide (acide sulfurique dilué) fuit de la batterie, ne pas toucher ce liquide.

- Cela peut provoquer la cécité ou des brûlures.
- S'il entre en contact avec les yeux ou la peau, rincer abondamment à l'eau claire avant de consulter un médecin.

Ne pas démonter ou modifier la batterie.

- Cela peut entraîner une fuite d'acide sulfurique dilué, ce qui peut causer la cécité et des brûlures.

Ne pas faire tomber la batterie ni l'exposer à des chocs violents.

- Une fuite d'acide sulfurique dilué peut se produire.

Ne pas court-circuiter la batterie avec des objets métalliques.

- Cela peut entraîner un choc électrique, un incendie ou des brûlures.
- Une batterie usagée peut encore contenir de l'énergie électrique.

⚠ Attention (pour le remplacement de la batterie)

Ne pas jeter la batterie au feu ni la briser.

- La batterie peut exploser ou connaître une fuite d'acide sulfurique dilué.

Ne pas utiliser simultanément une batterie neuve et une batterie usagée.

- Une fuite d'acide sulfurique dilué peut se produire.

- Une batterie peut présenter un risque de choc électrique et de courant élevé de court-circuit. Les précautions suivantes doivent être observées lors des interventions sur les batteries :
  1) Retirer les montres, bagues ou autres objets métalliques des mains.
  2) Utiliser des outils pourvus de poignées isolées.
  3) Porter des gants et bottes en caoutchouc.
  4) Ne pas poser d'outils ou de pièces métalliques sur les batteries.
  5) Débrancher la source de chargement avant de connecter ou déconnecter les bornes des batteries.
- L'entretien des batteries doit être effectué ou supervisé par un personnel connaissant bien les batteries et les précautions nécessaires. Tenir le personnel non autorisé à l'écart des batteries.

Remarques

Lorsque l'appareil est déplacé d'un endroit froid à un endroit chaud, le laisser au repos pendant plusieurs heures avant de l'utiliser.

- Si l'appareil est rapidement mis en marche après avoir été déplacé à un endroit plus chaud, de la condensation peut se former à l'intérieur de l'appareil et provoquer une panne.

Recharger la batterie pendant au moins 8 heures après l'achat de l'appareil.

- Si l'appareil n'est pas utilisé pendant une longue période après l'achat, la batterie peut se détériorer et devenir inutilisable.
- Pour charger une batterie, brancher la fiche d'entrée AC de l'appareil à une prise murale (alimentation secteur).

Lors du stockage de l'appareil, charger la batterie pendant au moins 8 heures et couper l'interrupteur d'alimentation.
Recharger la batterie pendant au moins 8 heures tous les 6 mois lorsque la température de stockage est de 25ºC ou moins, ou tous les deux mois, lorsque la température de stockage est de 40ºC ou moins.

- Même si l'appareil n'est pas utilisé, sa batterie se décharge progressivement, et s'il est laissé pendant une longue période, il passe dans un état de décharge excessive.
  La durée d'autonomie peut être réduite et la batterie devenir inutilisable.
- Nous vous recommandons de stocker l'appareil à une température de 25ºC ou moins lorsque vous le rangez pendant une longue période.
- Couper l'interrupteur d'alimentation de l'appareil avant de le ranger.
- Avant de ranger une batterie supplémentaire, la recharger pendant au moins 24 heures.

Ne pas court-circuiter les lignes de sortie de l'appareil entre elles, et ne pas court-circuiter les lignes de sortie vers la terre.

- L'appareil peut tomber en panne.

Ne pas brancher la fiche d'entrée AC de l'appareil à sa prise de sortie d'alimentation en Mode batterie.

- L'appareil peut tomber en panne.

Ne pas connecter une imprimante page à page (comme une imprimante laser) à l'appareil.

- L'appareil passe de façon répétée et fréquente entre le Mode alimentation secteur et le Mode batterie, ce qui peut raccourcir la durée de vie de la batterie.
- Une imprimante page par page fonctionne avec un courant de crête élevé, de sorte qu'un dépassement de la puissance de raccordement ou une coupure de courant en raison d'une chute de tension instantanée peut être détectée.

Vérifier le fonctionnement du système préalablement si l'appareil est utilisé en combinaison avec un équipement dont la fréquence d'alimentation électrique varie de façon importante, comme un générateur électrique individuel.

- L'appareil reconnaît automatiquement la fréquence de l'alimentation d'entrée lorsque l'alimentation d'entrée est fournie. Si l'appareil est connecté lorsque la fréquence de l'alimentation d'entrée n'est pas stable au niveau nominal, l'appareil risque de mal identifier la fréquence d'alimentation et de ne pas fonctionner (Si l'appareil est en marche, le passage de l'alimentation secteur à une autre source d'alimentation, tel un générateur, ne pose pas de problème.)

Ne pas installer ni ranger l'appareil dans un endroit exposé à la lumière directe du soleil.

- L'augmentation de la température peut provoquer une détérioration accélérée de la batterie intégrée et la rendre inutilisable.

Ne pas effectuer d'essai de rigidité diélectrique.

- Le circuit d'entrée comporte un dispositif d'absorption de surtension intégré. Un essai de rigidité diélectrique peut le détruire.
- Lors de l'exécution d'un test de résistance d'isolation, utiliser la gamme 250V DC.

Remarques

Avant d'arrêter l'alimentation secteur de l'appareil, éteindre l'interrupteur d'alimentation de l'appareil.

- L'appareil passe en Mode batterie lorsque l'alimentation secteur est arrêtée. Si l'appareil est fréquemment utilisé en Mode batterie, l'autonomie de la batterie peut se voir considérablement réduite.

Tester à l'avance le fonctionnement si l'appareil est utilisé dans un mode autre que "Mode 100V de sortie".

- En Mode batterie, la tension maximale (tension de crête) de sortie (onde rectangulaire) doit être inférieure à la tension maximale en Mode alimentation secteur. Pour cette raison, certains équipements branchés peuvent ne pas fonctionner correctement.

Si cet appareil est utilisé avec un dispositif inductif comme une bobine, un transformateur ou un moteur, vérifier préalablement le fonctionnement.

- Avec certains types d'équipements, l'effet du courant d'appel peut interrompre le fonctionnement normal de l'appareil.

Prendre les mesures nécessaires pour répondre aux accidents imprévisibles, telles que les sauvegardes de données et la redondance du système.

- La sortie peut s'arrêter lors d'une panne de circuit dans l'ASC.

Cet appareil utilise des batteries au plomb,

- Qui sont de précieuses ressources recyclables. Veuillez les recycler.

1 Preparation

1-1 Unpacking the product

⚠ Caution

The weight of the product is 13 kg (BU50SW/BU75SW) /15.5 kg (BU100SW) /16.5 kg (BU150SW).
Unpack/transport this product considering this weight.

- Dropping may cause injury.

Open the package box and take out the UPS and accessories.

1-2 Checking the contents

Check whether all the package contents are included and there is no damage found on their appearance.
If you should notice defects or anything wrong, contact us; ____

(1) Accessories related to the main unit

	BU50SW	BU75SW	BU100SW	BU150SW
Instruction manual (Japanese and English versions)	1	1	1	1
Warranty	1	1	1	1
User registration card	1	1	1	1
Label (How to determine operating status)	1	1	1	1
AC input for 20A (NEMA L5-20P)	-	-	-	1
3P-2P conversion plug *1	1	1	1	1
Connector for remote ON/OFF	1	1	1	1
Omron contact info label	1	1	1	1
English label for control panel	1	1	1	1

(2) UPS monitoring software

	BU50SW	BU75SW	BU100SW	BU150SW
Quick Installation Guide	1	1	1	1
CD-ROM	1	1	1	1
Connection cable (RS-232C)	1	1	1	1

<Accessories related to main unit>

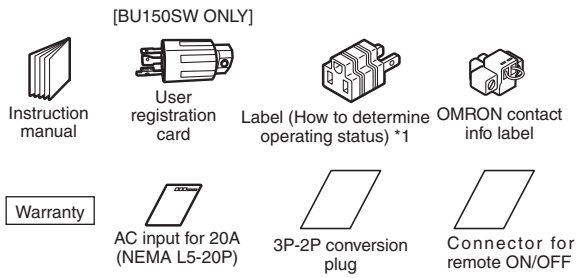

<UPS monitoring software>

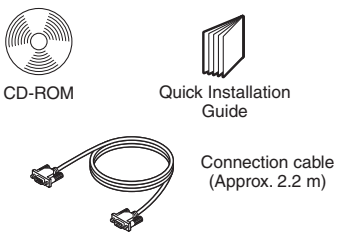

*1 Do not use 3P-2P conversion plug when the unit is used in compliance with UL standard.

1-3 Name of each part

This section describes the name of each part of the UPS.
For information on the function of each part, refer to "2. Installation and connection" on page 5 and "3. Operation" on page 16 that provides the details.

Front view

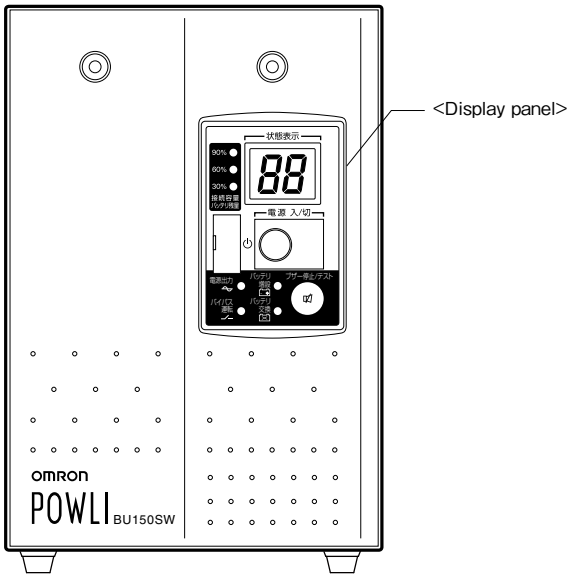

[Enlarged view of the display panel]

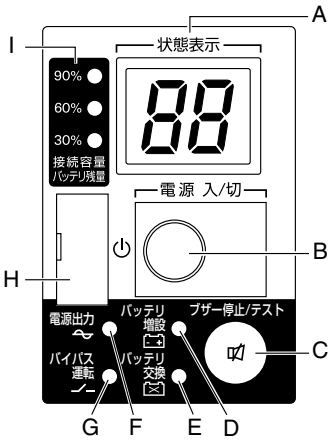

A. Status indicator digital display
B. Power switch
C. Beep stop/test switch
D. Battery addition lamp
(BU100SW and BU150SW only)
E. Battery replacement lamp
F. Power supply output lamp
G. Bypass operation lamp
(The input power supply is output as is.)
H. Setting switch cover
I. Connection capacity/battery level meter

Side view

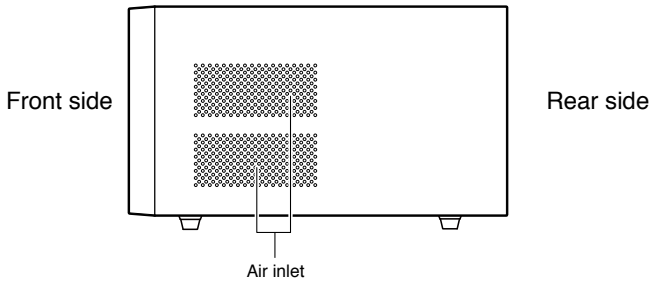

Rear view

<BU50SW/BU75SW>

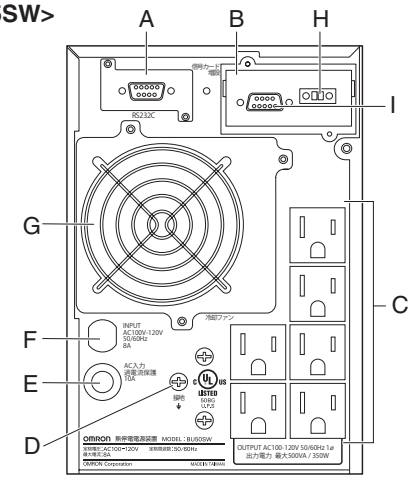

A. RS232C connector
B. Contact signal card
C. Power supply output receptacles
(Backup is performed during power failure.)
D. Grounding terminal
E. AC input overcurrent protection
F. AC input cable
G. Cooling fan (air vent)
H. Remote ON/OFF connector
I. Contact signal connector

<BU100SW>

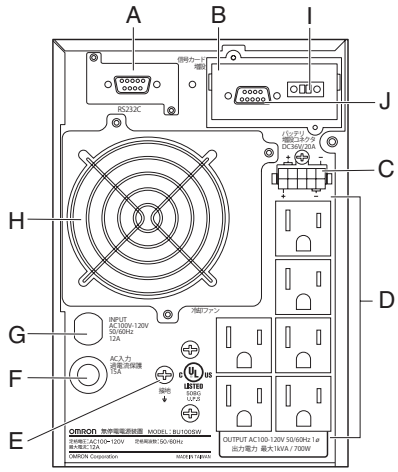

A. RS232C connector
B. Contact signal card
C. Additional battery connector
D. Power supply output receptacles
(Backup is performed during power failure.)
E. Grounding terminal
F. AC input overcurrent protection
G. AC input cable
H. Cooling fan (air vent)
I. Remote ON/OFF connector
J. Contact signal connector

<BU150SW>

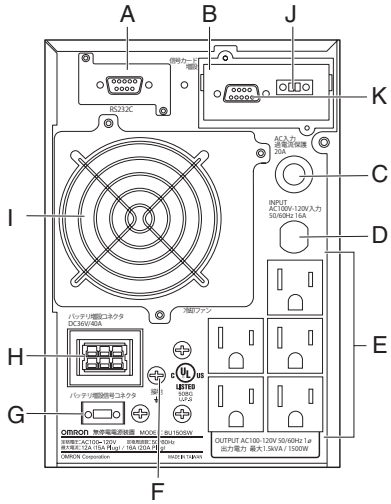

A. RS232C connector
B. Contact signal card
C. AC input overcurrent protection
D. AC input cable
E. Power supply output receptacles
(Backup is performed during power failure.)
F. Grounding terminal
G. Additional battery signal connector
H. Additional battery connector
I. Cooling fan (air vent)
J. Remote ON/OFF connector
K. Contact signal connector

1-4 Explanation of symbols used on unit

Symbol	Description
	Start the UPS.
	Stop the UPS.
	Suspend a beep.
	UPS output power enabled, supplied by operating on line mode, battery mode.
	Bypass output “ON”.
	Additional battery unit connected to the UPS. (For BU100SW,BU150SW only.)
	Batteries at end of useful life, necessary to replace the batteries.

2 Installation and connection

2-1 Precautions and notes on installation and connection

⚠ Caution (for installation and connection)

Carry the unit considering its weight and balance, and place it on a stable and robust base.

- Dropping or toppling the unit may cause injury.
- The weight of this unit is approximately: 13 kg (BU50SW/BU75SW)
  15.5 kg (BU100SW)
  16.5 kg (BU150SW)
- If you drop the unit, stop using it and have it inspected and repaired.
  For repair, contact us; ____

Keep plastic package bags out of reach of children.

- Children may suffocate if they place their heads into plastic bags.

Make sure to connect the unit's AC input plug to a commercial power source with rated input voltage (100 to 120V AC) and 50/60Hz frequency.

- Connecting to a wall outlet (commercial power) with a different voltage or frequency may result in a fire.
- The unit may fail.

Do not connect devices such as dryers, which have a half-wave rectifier that allows only half-cycle AC power to flow through.

- Overcurrent may damage the UPS.

Connect the unit to a wall outlet with the proper current capacity, as follows: 8A or more (BU50SW), 10A or more (BU75SW), 12A or more (BU100SW), or 16A or more (BU150SW).

- Otherwise, the power cord may be heated.
- When equipment with the maximum output capacity is connected, a maximum current of 8A (BU50SW), 10A (BU75SW), 12A (BU100SW), or 16A (BU150SW) flows.

Provide secure grounding.

- For a 3P wall outlet, directly connect the AC input plug of the unit to it. A failure or leak that occurs when the unit is not properly grounded may result in electric shock.
- When you use a 3P-2P conversion plug for AC input plug, be sure to perform grounding before connecting the AC input plug into a wall outlet (commercial power).
  Do not disconnect the grounding before disconnecting the AC input plug from a wall outlet (commercial power).

Do not disassemble, repair, or modify the unit.

- Doing so may cause an electric shock or a fire.

Do not install the unit in other than specified orientations.

- Dropping or toppling the unit may cause injury.
- If you install the unit in an orientation other than specified, the unit cannot be protected from a battery fluid leakage.

Do not use the unit where the maximum temperature exceeds 40°C.

- The battery becomes weak rapidly, which may cause a fire.
- Doing so may cause a failure or malfunction of the unit.

⚠ Caution (for installation and connection)

Do not exceed the ranges specified for environmental conditions during use/storage.
Do not install or store the unit in the places listed below.

- Do not store in places where the humidity is lower than 10% or higher than 90%.
- Do not use in places where the humidity is lower than 25% or higher than 85%.
- Do not install/store the unit in closed places such as cabinets with no clearance, places where there is flammable or corrosive gas, places with large amounts of dust, places exposed to direct sunlight, places exposed to shock or vibration, or outdoors.
- Installation or storing the unit in such a place may cause a fire.

Do not connect equipment that exceeds the output capacity of the unit. You can use a plug strip to connect additional devices, but do not connect devices that exceed the current capacity of the plug strip.

- The current protection of the unit may operate, which may stop the output.
- The wiring of the plug strip heats up, which may cause a fire.

Do not pinch or sharply bend the cable.
Do not fold or knot the cable.

- Doing so may cause the cable to be damaged or heated, which may cause an electric shock or a fire.
- If the cable is damaged, stop using the unit and have the cable repaired.
  For repair, contact us; ____

All of the included accessories are designed to be used exclusively with the unit. Do not use the accessories with other devices.

- Doing so may compromise the safety of devices.
- This UPS utilizes voltages that may be hazardous. Do not attempt to disassemble the unit The unit contains no user serviceable parts.Only factory service personnel may perform repairs.

- Connection to any other type of receptacle other than a two-pole,three-wire grounded receptacle may result in shock hazard as well as violate local electical codes.

- Do not allow liquids or any foreign object to enter the UPS. DO not place beverages or any other liquid-containing vessels on or near the unit.

- This unit intended for installation in a controlled environment (temperature controlled, indoor area free of conductive contaminants).Avoid installing the UPS in locations where there is standing or running water,or excessive humidity.

- Do not attach a power strip or surge suppressor to the UPS.

- Do not attach non-computer-related items,such as medical equipment,life-support equipment,microwave ovens,or vacuum cleaners to UPS.

- With the installation of the equipment it should be prevented, that the sum of the leakage current of the UPS and the connected consumer does not exceed 3.5mA.

Do not block the air vents on the side and rear of the unit.

- Doing so will cause the internal temperature to rise, which may cause the unit to fail and the battery to deteriorate.
- Leave at least 5 cm of space between the vent and the wall.

⚠ Caution (for installation and connection)

Do not connect a standalone transformer such as a voltage transformer or isolating transformer to the output side.

- Overcurrent may damage the UPS.
- There is no problem in connecting a transformer to the input side.

Do not connect devices that cannot be used with commercial power supply.

- When the unit's power switch is turned ON and an error occurs with the connected device, bypass operation is performed and commercial power supply is supplied as is to the connected devices.

When a 15A plug (NEMA5-15P) is used with BU150SW, the maximum capacity connectable to output is approximately 1100VA/950W.

- Doing so will cause the internal temperature to rise, which may cause the unit to fail and the battery to deteriorate.
- When the "15A input exceeded" display appears (OL or E0 is displayed on the status indicator), replace the input plug with a 20A input plug.

When replacing the input plug for the BU150SW, perform connection as specified, making sure to properly match the plug terminals with the appropriate wire colors.

- Refer to "Using a 20A plug" on page 16.
- Failure to do so may result in electric shock or ground fault.

For PLUGGABLE EQUIPMENT, the socket-outlet shall be installer near the equipment and shall be easily accessible.

Notes

When moving the unit from a cold place to a warm place, leave it for several hours before using it.

- If the unit is promptly turned ON after being moved to a warmer place, condensation may form inside the unit and cause it to fail.

Charge the battery for at least 8 hours soon after purchasing the unit.
Recharge the battery for at least 8 hours every 6 months when the storage tempareture is 25°C or less, or every 2 months when the storage temperture is 40°C or less.

- If you do not use the unit for a long time after the purchase, the battery may deteriorate and the battery may become unusable.
- To charge a battery, connect the AC input plug of the unit to a wall outlet (commercial power).

When storing the unit, charge the battery for at least 8 hours and turn OFF the power switch.

- Even if the unit is not used, the battery gradually discharges, and if it is left for a long time, it goes into an over discharge state.
  The backup time may become shorter or the battery may become unusable.
- We recommend keeping the temperature 25°C or less when storing the unit for long periods of time.
- Before storing an additional battery, charge it for at least 24 hours.

Do not short the output lines of the unit to each other, and do not short the output lines to the ground.

- The unit may fail.

Notes

Do not connect the AC input plug of the unit to its Power Supply Output Receptacle during the Battery Mode.

- The unit may fail.

Do not connect a page printer (such as a laser printer) to the unit.

- The unit repeatedly and frequently switches between Commercial Power Mode and Battery Mode, which may shorten the life of the battery.
- The page printer has a large peak current, so an excess of the connection capacity or a power failure due to instantaneous voltage drop may be detected.

Check system operation beforehand if the unit is used in combination with a device whose power supply frequency fluctuates widely, such as a personal electric generator.

- The unit automatically recognizes the input power frequency when input power is supplied.If the unit is connected when the input power frequency is not stable at the rated level, the unit may misidentify the power supply frequency and may fail to operate normally. (If the unit is in operation, changing from commercial power supply to another power supply source, such as generating equipment, will cause no problem.)

Do not install or store the unit in a place exposed to direct sunlight.

- The rise of temperature may cause the built-in battery to deteriorate rapidly and become unusable.

Do not perform a withstand voltage test.

- The input circuit has a built-in surge absorption device. A withstand voltage test may break it.
- When performing an insulation resistance test, use the 250VDC range.

Before stopping the commercial power to the unit, turn OFF the power switch of the unit.

- The unit enters Battery Mode when commercial power is stopped. If you frequently use the unit in Battery Mode, the battery life may be significantly shortened.

Check the operation beforehand if the unit is used in any mode other than “Output 100V mode”.

- In Battery Mode, the maximum voltage (peak voltage) of output (rectangular wave) may be lower than the maximum voltage in Commercial Power Mode. For this reason, some connected devices may fail to operate normally.

If this unit is used with an inductive device such as a coil, transformer or motor, check the operation beforehand.

- With some types of devices, the effect of inrush current may cause this unit to stop operating properly.

Installation et raccordement

Précautions et notes concernant l'installation et le raccordement

⚠ Attention (pour l'installation et le raccordement)

Transporter l'appareil en tenant compte de son poids et de son équilibre, et le placer sur un support stable et robuste.

- Une chute ou un renversement de l'appareil peut causer des blessures.
- Le poids de cette unité est d'environ : 13 kg (BU50SW/BU75SW)
  15,5 kg (BU100SW)
  16,5 kg (BU150SW)
- En cas de chute de l'appareil, cesser de l'utiliser et le faire inspecter et réparer.
  Pour toute réparation, nous contacter au : ____

Garder les sacs en plastique d'emballage hors de portée des enfants.

- Les enfants peuvent s'étouffer s'ils placent leur tête dans un sac en plastique.

S'assurer de brancher la fiche d'entrée AC de l'appareil à une alimentation secteur avec une tension d'entrée nominale (100 V à 120 V AC) et une fréquence de 50/60Hz.

- Le branchement à une prise murale (alimentation secteur) d'une tension ou fréquence différente peut provoquer un incendie.
- L'appareil peut tomber en panne.

Ne pas brancher d'appareils tels que des séchoirs qui ont un redresseur mono-alternance qui ne permet qu'au demi-cycle d'alimentation AC de les parcourir.

- La surtension peut endommager l'ASC.

Brancher l'appareil à une prise murale avec la puissance électrique appropriée suivante : 8A ou plus (BU50SW), 10A ou plus (BU75SW), 12A ou plus (BU100SW) ou 16A ou plus (BU150SW).

- Sinon, le cordon d'alimentation risque de chauffer.
- Lorsqu'un équipement d'une puissance de sortie maximale est branché, un courant maximum de 8A (BU50SW), 10A (BU75SW), 12A (BU100SW) ou 16A (BU150SW) est délivré.

Assurer une mise à la terre correcte.

- Pour une prise de courant 3P, y brancher directement la fiche d'entrée AC de l'appareil. Une panne ou une fuite se produisant lorsque l'appareil n'est pas correctement relié à la terre peut provoquer un choc électrique.
- Lors de l'utilisation d'une fiche de conversion 3P-2P pour la fiche d'entrée AC, s'assurer de bien effectuer la mise à la terre avant de brancher la fiche d'entrée AC à une prise murale (alimentation secteur).
  Ne pas débrancher la mise à la terre avant de débrancher la fiche d'entrée AC de sa prise murale (alimentation secteur).

Ne pas démonter, réparer ou modifier l'appareil.

- Cela peut provoquer un choc électrique ou un incendie.

Ne pas installer l'appareil dans une autre position que celles indiquées.

- Une chute ou un renversement de l'appareil peut causer des blessures.
- Si l'appareil est installé dans une position autre que celles spécifiées, il ne sera plus à l'abri des fuites de liquide de batterie.

⚠ Attention (pour l'installation et le raccordement)

Ne pas utiliser l'appareil lorsque la température maximale dépasse 40ºC.

- La batterie s'affaiblit rapidement, ce qui peut provoquer un incendie.
- Cela peut provoquer une panne ou un dysfonctionnement de l'appareil.

Ne pas dépasser les limites spécifiées comme conditions environnementales lors de l'utilisation / stockage.
Ne pas installer ni ranger l'appareil dans les endroits indiqués ci-dessous.

- Ne pas entreposer dans des endroits où l'humidité est inférieure à 10% ou supérieure à 90 %.
- Ne pas utiliser dans des endroits où l'humidité est inférieure à 25% ou supérieure à 85%.
- Ne pas installer/stocker l'appareil dans des endroits fermés tels que des armoires sans dégagement, en présence de gaz inflammables ou corrosifs, des endroits soumis à de grandes quantités de poussière, des endroits exposés aux rayons directs du soleil, des endroits exposés à des chocs ou à des vibrations, ou à l'extérieur.
- Installer ou ranger l'appareil dans un endroit de ce type peut provoquer un incendie.

Ne pas brancher d'équipement dépassant l'alimentation de sortie de l'appareil. Il est possible d'utiliser une multiprise pour brancher des périphériques supplémentaires, mais ne pas brancher de périphériques dépassant la capacité électrique de la multipri.

- La protection contre les surintensités de l'appareil peut se déclencher, ce qui peut empêcher la sortie.
- Le câblage de multiprise chauffe, ce qui peut provoquer un incendie.

Ne pas pincer ou fortement plier le câble.
Ne pas plier ou nouer le câble.

- Cela peut endommager ou faire chauffer le câble, ce qui peut provoquer un choc électrique ou un incendie.
- Si le câble est endommagé, cesser d'utiliser l'appareil et faire réparer le câble.
  Pour toute réparation, nous contacter au : ____

Tous les accessoires inclus ont été conçus pour être utilisés exclusivement avec l'appareil. Ne pas utiliser ces accessoires avec d'autres appareils.

- Cela peut compromettre la sécurité des équipements.
- Cette ASC utilise des tensions qui peuvent être dangereuses. Ne pas tenter de démonter l'appareil. L'appareil ne contient aucune pièce réparable par l'utilisateur. Seul le personnel de l'usine est habilité à effectuer des réparations.

- Le branchement à tout autre type de prise qu'une prise dotée de 2 pôles secteur et 3 fils avec mise à la terre peut entraîner des risques de choc électrique et violer les codes électriques locaux.

- Ne laisser aucun liquide ou tout autre objet étranger pénétrer dans l'ASC. Ne JAMAIS placer de boissons ou autres récipients contenant du liquide sur ou près de l'appareil.

- Cet appareil a été conçu pour être installé dans un environnement contrôlé (température contrôlée, espace intérieur exempt de contaminants conducteurs). Éviter d'installer l'ASC dans des endroits où se trouve de l'eau stagnante, courante ou une humidité excessive.

- Ne pas fixer une multiprise ou un parasurtenseur à l'ASC.

- Ne pas brancher d'éléments sans rapport avec l'informatique, tels que des équipements médicaux, des équipements d'assistance à la vie, des fours à micro-ondes ou des aspirateurs à l'ASC.

- Lors de l'installation de l'équipement, s'assurer que la somme du courant de fuite de l'ASC et du récepteur raccordé ne dépasse pas 3,5 mA.

⚠ Attention (pour l'installation et le raccordement)

Ne pas obstruer les bouches d'aération sur le côté et à l'arrière de l'appareil.

- Cela peut provoquer une augmentation de la température interne, ce qui peut entraîner une panne de l'appareil et une détérioration de la batterie.
- Laisser au moins 5 cm d'espace entre l'aération et le mur.

Ne pas connecter un transformateur autonome tel qu'un transformateur de tension ou un transformateur d'isolement du côté sortie.

- La surtension peut endommager l'ASC.
- Le branchement d'un transformateur du côté entrée ne pose pas de problème.

Ne pas connecter des périphériques qui ne peuvent pas être utilisés avec une alimentation secteur.

- Lorsque l'interrupteur d'alimentation de l'appareil est allumé et qu'une erreur se produit avec l'équipement branché, une opération de dérivation est effectuée et l'alimentation secteur est fournie telle quelle aux équipements branchés.

Lorsqu'une prise 15 A (NEMA5 -15P) est utilisée avec le BU150SW, la puissance maximale raccordable à la sortie est d'environ 1100VA/950W.

- Cela peut provoquer une augmentation de la température interne, ce qui peut entraîner une panne de l'appareil et une détérioration de la batterie.
- Lorsque l'affichage "entrée 15A dépassée" apparaît (ou qu'OL ou E0 est affiché sur l'indicateur d'état), remplacer la fiche d'entrée par une fiche d'entrée 20A.

Lors du remplacement de la fiche d'entrée pour le BU150SW, réaliser une connexion comme spécifié, en s'assurant de bien faire correspondre les bornes enfichables avec les couleurs des fils appropriées.

- Consulter "Utilisation d'une prise 20A" à la page 16.
- Ne pas le faire peut entraîner un choc électrique ou une faute à la terre.

Pour les ÉQUIPEMENTS BRANCHABLES, la prise électrique doit être installée à proximité de l'équipement et être facilement accessible.

Remarques

Lorsque l'appareil est déplacé d'un endroit froid à un endroit chaud, le laisser au repos pendant plusieurs heures avant de l'utiliser.

- Si l'appareil est rapidement mis en marche après avoir été déplacé à un endroit plus chaud, de la condensation peut se former à l'intérieur de l'appareil et provoquer une panne.

Charger la batterie pendant au moins 8 heures après l'achat de l'appareil. Recharger la batterie pendant au moins 8 heures tous les 6 mois lorsque la température de stockage est de 25ºC ou moins, ou tous les 2 mois, lorsque la température de stockage est de 40ºC ou moins.

- Si l'appareil n'est pas utilisé pendant une longue période après l'achat, la batterie peut se détériorer et devenir inutilisable.
- Pour charger une batterie, brancher la fiche d'entrée AC de l'appareil à une prise murale (alimentation secteur).

Lors du stockage de l'appareil, charger la batterie pendant au moins 8 heures et couper l'interrupteur d'alimentation.

- Même si l'appareil n'est pas utilisé, sa batterie se décharge progressivement, et s'il est laissé pendant une longue période, il passe dans un état de décharge excessive.
  La durée d'autonomie peut être réduite et la batterie devenir inutilisable.
- Nous vous recommandons de stocker l'appareil à une température de 25ºC ou moins lorsque vous le rangez pendant une longue période.
- Avant de ranger une batterie supplémentaire, la recharger pendant au moins 24 heures.

Remarques

Ne pas court-circuiter les lignes de sortie de l'appareil entre elles, et ne pas court-circuiter les lignes de sortie vers la terre.

- L'appareil peut tomber en panne.

Ne pas brancher la fiche d'entrée AC de l'appareil à sa prise de sortie d'alimentation en Mode batterie.

- L'appareil peut tomber en panne.

Ne pas connecter une imprimante page à page (comme une imprimante laser) à l'appareil.

- L'appareil passe de façon répétée et fréquente entre le Mode alimentation secteur et le Mode batterie, ce qui peut raccourcir la durée de vie de la batterie.
- Une imprimante page par page fonctionne avec un courant de crête élevé, de sorte qu'un dépassement de la puissance de raccordement ou une coupure de courant en raison d'une chute de tension instantanée peut être détectée.

Vérifier le fonctionnement du système préalablement si l'appareil est utilisé en combinaison avec un équipement dont la fréquence d'alimentation électrique varie de façon importante, comme un générateur électrique individuel.

- L'appareil reconnaît automatiquement la fréquence de l'alimentation d'entrée lorsque l'alimentation d'entrée est fournie. Si l'appareil est connecté lorsque la fréquence de l'alimentation d'entrée n'est pas stable au niveau nominal, l'appareil risque de mal identifier la fréquence d'alimentation et de ne pas fonctionner (Si l'appareil est en marche, le passage de l'alimentation secteur à une autre source d'alimentation, tel un générateur, ne pose pas de problème.)

Ne pas installer ni ranger l'appareil dans un endroit exposé à la lumière directe du soleil.

- L'augmentation de la température peut provoquer une détérioration accélérée de la batterie intégrée et la rendre inutilisable.

Ne pas effectuer d'essai de rigidité diélectrique.

- Le circuit d'entrée comporte un dispositif d'absorption de surtension intégré. Un essai de rigidité diélectrique peut le détruire.
- Lors de l'exécution d'un test de résistance d'isolation, utiliser la gamme 250VDC.

Avant d'arrêter l'alimentation secteur de l'appareil, éteindre l'interrupteur d'alimentation de l'appareil.

- L'appareil passe en Mode batterie lorsque l'alimentation secteur est arrêtée. Si l'appareil est fréquemment utilisé en Mode batterie, l'autonomie de la batterie peut se voir considérablement réduite.

Tester à l'avance le fonctionnement si l'appareil est utilisé dans un mode autre que "Mode 100V de sortie".

- En Mode batterie, la tension maximale (tension de crête) de sortie (onde rectangulaire) doit être inférieure à la tension maximale en Mode alimentation secteur. Pour cette raison, certains équipements branchés peuvent ne pas fonctionner correctement.

Si cet appareil est utilisé avec un dispositif inductif comme une bobine, un transformateur ou un moteur, vérifier préalablement le fonctionnement.

- Avec certains types d'équipements, l'effet du courant d'appel peut interrompre le fonctionnement normal de l'appareil.

2-2 Installation and connection

This section describes how to install the UPS. Do not use this unit in any position other than the “correct positions” indicated in the illustration below.

Note

Before installing this device, make a record of the serial number of this device.
The serial number is required when contacting us about the device.
The serial number is written in the label on the unit.

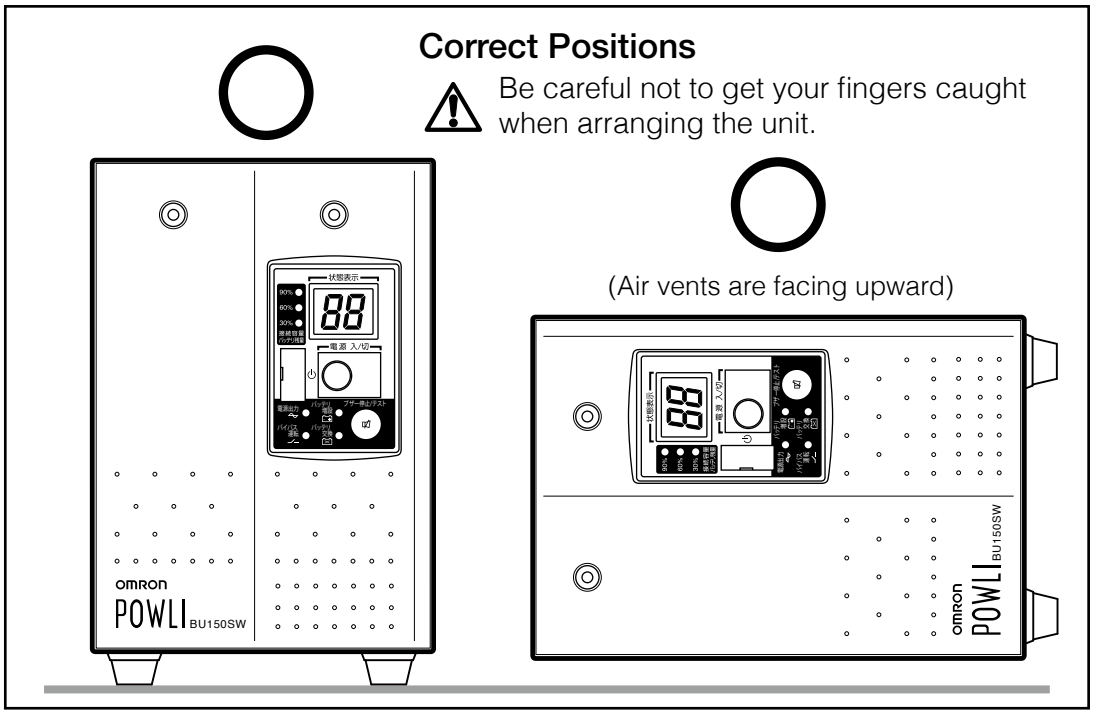

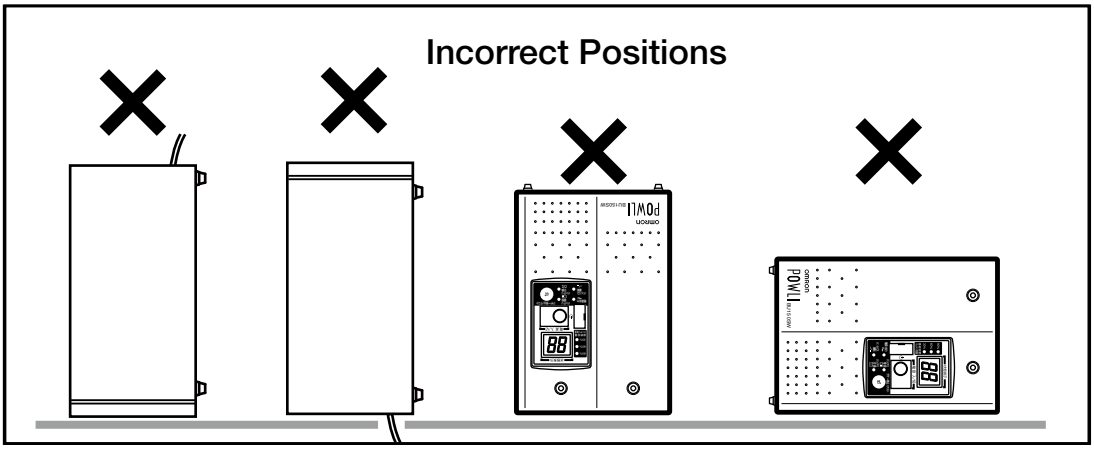

※ The feet can also be anchored to the floor with screws if you use BUP100S mounting brackets (sold separately). Refer to the BUP100S instruction manual for more details.

Installation et raccordement

Cette section décrit comment installer l'ASC. Ne pas utiliser l'appareil dans toute position autre que les "positions correctes" indiquées sur l'illustration ci-dessous.

Remarque

Avant d'installer cet appareil, consigner son numéro de série.
Le numéro de série est nécessaire pour nous contacter au sujet de l'appareil.
Le numéro de série est inscrit sur l'étiquette de l'appareil.

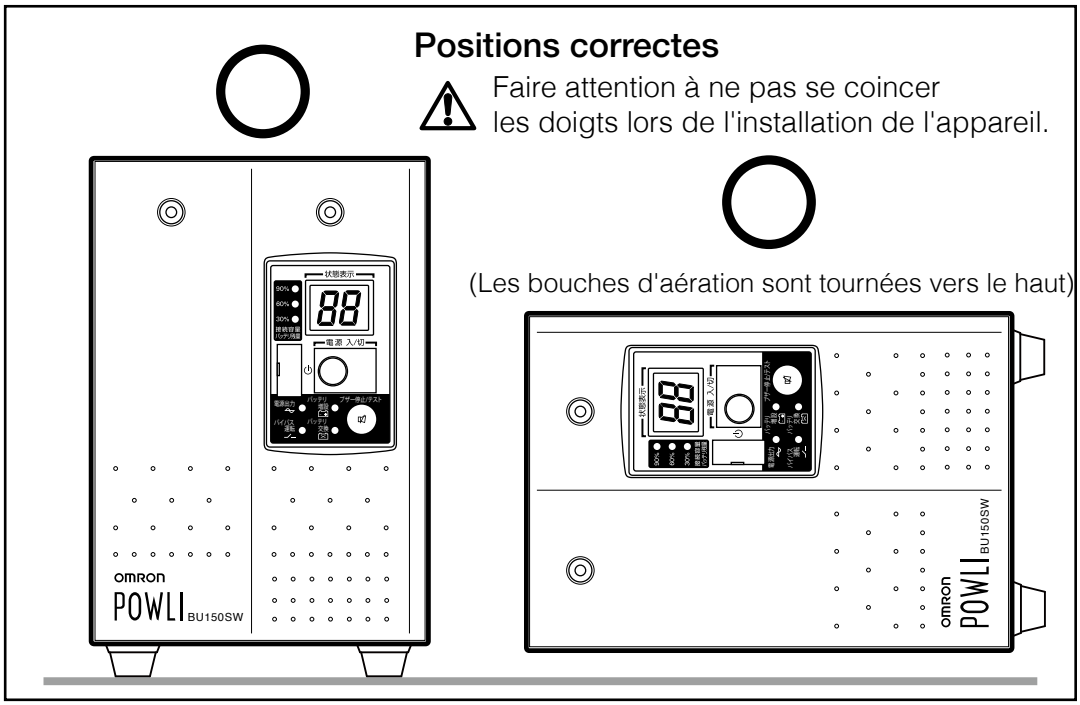

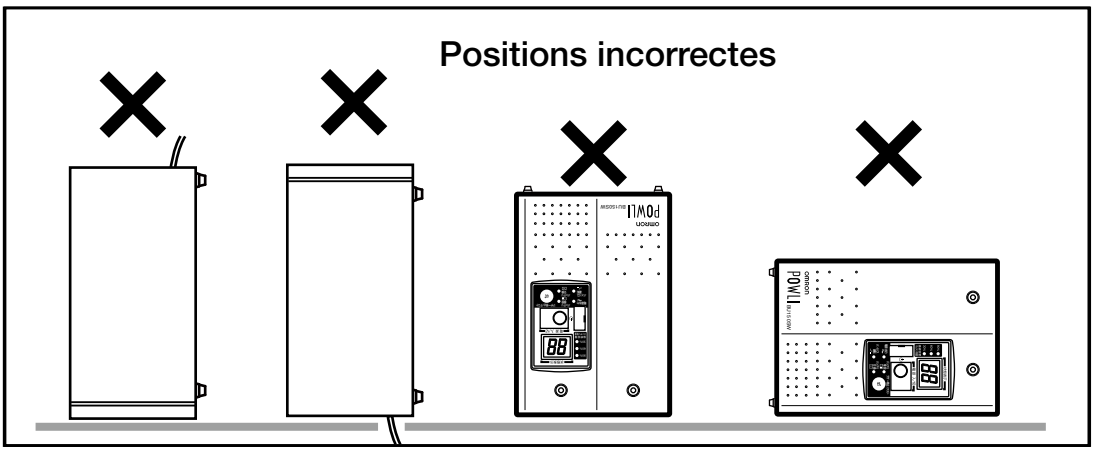

※ Les pieds peuvent également être ancrés au sol par des vis si vous utilisez les supports de montage du BUP100S (vendus séparément). Consulter le manuel d'instructions du BUP100S pour de plus amples détails.

2-3 Connecting the equipment

(1) Disconnect the AC Input Plugs of all devices you want to back up such as your PC and modems from a wall outlet (commercial power).

(2) Connect devices you want to back up to the Power Supply Output Receptacles of the UPS.

- If you need more output receptacles than those of the UPS, purchase a plug strip and use it for extra output receptacles.
- When using a 2-pin input plug with a grounding wire, connect the grounding wire to earth in building.

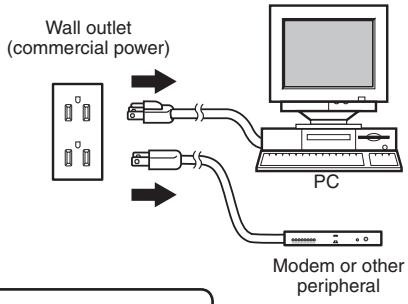

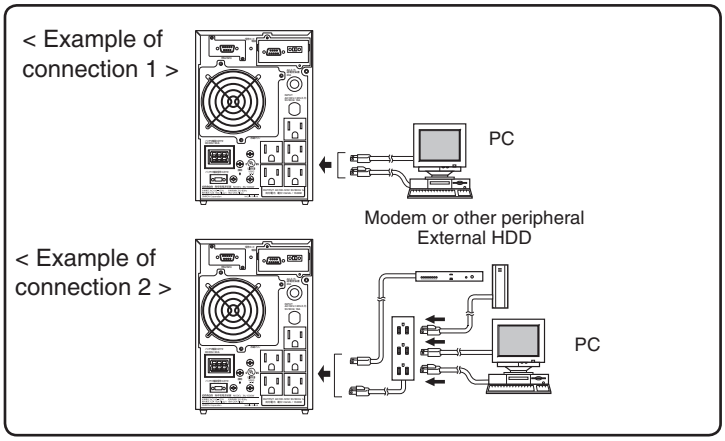

- When you want to use an AC adaptor, connect it to a Power Supply Output Receptacle of the UPS with space enough for the connection.

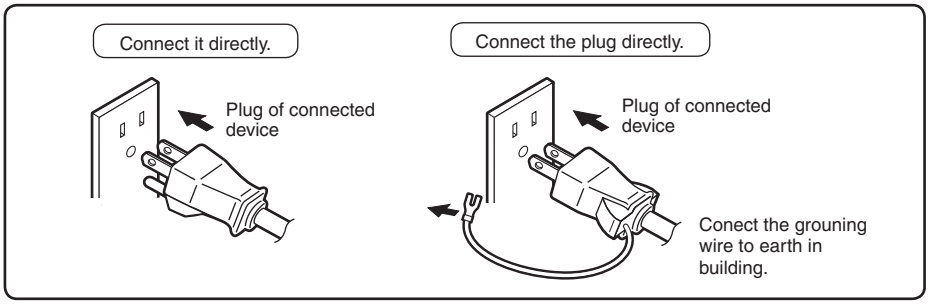

(3) If you use the included UPS monitoring software or the standard UPS service of Windows NT or Windows XP/2000 or if you use Contact Signal, connect the connecting cable between the UPS and your PC.

See also **"7. Using the UPS monitoring software and Contact Signal" on page 50**
*** If you do not use the UPS monitoring software and Contact Signal, this step is not required.**

(4) When the installation and connection is complete, connect the AC Input Plug of the UPS to a wall outlet (commercial power).

<BU150SW>

- The BU150SW comes equipped with a 15A input plug (NEMA 5-15) at shipment.
  If this plug is used, make sure the capacity of the connected devices stays below the maximum capacities shown in the table below.
- When the "15A input exceeded" display appears (OL or E0 is displayed on the status indicator), do not continue using the unit with the 15A input plug. Replace the input plug with the included 20A plug.

⚠ Caution

When a 15A plug (NEMA5-15P) is used with BU150SW, the maximum capacity connectable to output is approximately 1100VA/950W.

- When the power consumption exceeds this capacity, the input voltage becomes larger than 15A, which may lead to overheating or fire.
- When the "15A input exceeded" display appears, replace the input plug with the 20A input plug.
- When the AC input is connected directly from a power switchboard, make sure that the wiring work is performed by a qualified electrical engineer (with Type II certification or higher). To use with up to 1500VA/1050W, a wiring capacity of 20A or more is required.
  (Recommended cable: nominal cross-section of 3.5mm^2 (AWG12) or more.)

Input plug	Maximum output capacity
15A plug	Up to 1100VA/950W
20A plug	Up to 1500VA/1050W

● Using a 15A plug

- It is possible to use a wall outlet (commercial power) with a basic 15A (NEMA 5-15) plug.
- It is possible to connect to a 2-pin outlet using the included 3P-2P adapter.

⚠ In this case, make sure the grounding is connected separately.

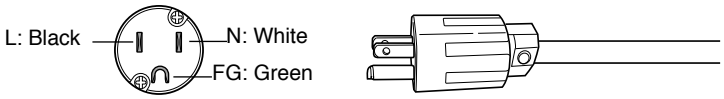

● Using a 20A plug

The maximum usable capacity is the rated output capacity of the BU150SW.

- Provide a wall outlet (commercial power) suitable for the shape of the 20A plug (NEMA L5-20).
- Replace the AC input plug of the BU150SW with the included NEMA L5-20 plug.

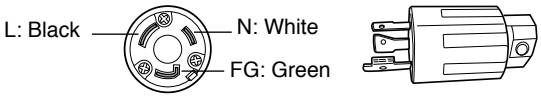

● If the input current exceeds 15A, replace the plug with the 20A plug that was included with the unit.

Changing the AC input cable

(1) Disconnect the 15A plug.

(2) Connect the NEMA L5-20 plug as shown in the diagram on the right.

⚠ Make sure that the wire colors match those in the diagram befor tightening the screw.

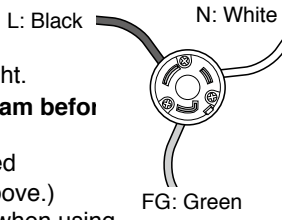

The maximum output capacity that can be connected is determined according to the settings of the setting switches. (See the table above.)
Turn OFF setting switch 8 when using a 15A plug, and turn it ON when using a 20A plug.
Malfunction occurs when the maximum output capacity is exceeded.

See also "Selecting functions with the DIP switch" Page 31

* If you convert to the included 20A plug, change the Setting switch.

<BU150SW>

- Le BU150SW est équipé d'une prise d'entrée de 15A (NEMA 5-15) lors de l'expédition. Si cette prise est utilisée, s'assurer que la puissance des appareils connectés reste en dessous des puissances maximales indiquées dans le tableau ci-dessous.
- Lorsque l'affichage "entrée 15A dépassée" apparaît (ou qu' OL ou E0 est affiché sur l'indicateur d'état), cesser d'utiliser l'appareil avec la fiche d'entrée de 15A. Remplacer la prise d'entrée par la prise 20A fournie.

⚠ Attention

Lorsqu'une prise 15 A (NEMA5 -15P) est utilisée avec le BU150SW, la puissance maximale raccordable à la sortie est d'environ 1100VA/950W.

- Lorsque la consommation électrique dépasse cette puissance, la tension d'entrée atteint alors plus de 15A, ce qui peut provoquer une surchauffe ou un incendie.
- Lorsque l'affichage "entrée 15A dépassée" apparaît, remplacer la fiche d'entrée par la fiche d'entrée 20A.
- Lors de la connexion de l'entrée AC directement à partir d'un tableau de distribution, s'assurer que les travaux de raccordement sont réalisés par un électricien qualifié (avec Certification de type II ou supérieure). Pour utiliser jusqu'à 1500VA/1050W, une capacité de câblage de 20A ou plus est nécessaire. (Câble recommandé : section nominale de 3,5mm2 (AWG12) ou plus)

Prise d'entrée	Puissance maximale à la sortie
Prise 15A	Jusqu'à 1100VA/950W
Prise 20A	Jusqu'à 1500VA/1050W

● Utilisation d'une prise 15A

- Il est possible d'utiliser une prise murale (alimentation secteur) avec une prise de base 15A (NEMA 5-15).
- Il est possible de se brancher à une prise à 2 broches en utilisant l'adaptateur 3P-2P fourni.

⚠ Dans ce cas, s'assurer que la mise à la terre est connectée séparément.

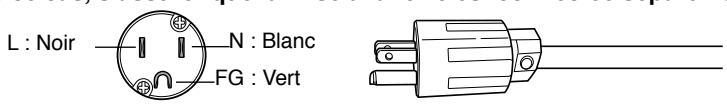

● Utilisation d'une prise 20A

La puissance maximale utilisable est la puissance de sortie nominale du BU150SW.

- Prévoir une prise murale (alimentation secteur) adaptée à la forme de la prise 20A (NEMA L5- 20).
- Remplacer la prise d'entrée AC du BU150SW avec la prise NEMA L5- 20 fournie.

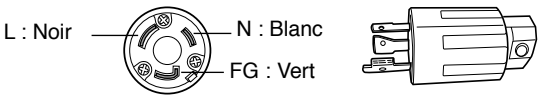

● Si le courant d'entrée dépasse 15A, remplacer la prise par la prise 20A fournie avec l'appareil.

Changement du câble d'entrée AC

(1) Débrancher la prise 15A.

(2) Brancher la prise L5- 20 NEMA comme indiqué sur le schéma de droite.

⚠ S'assurer que les couleurs des fils correspondent à celles du diagramme avant de serrer la vis.

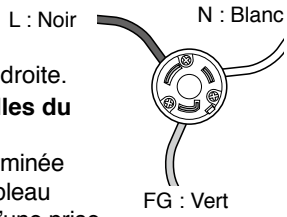

La puissance de sortie maximale qui peut être connectée est déterminée en fonction des réglages des commutateurs de réglage. (Voir le tableau ci-dessus.) Eteindre l'interrupteur de réglage 8 lors de l'utilisation d'une prise 15A, et l'allumer lors de l'utilisation d'une prise 20A.

Un dysfonctionnement se produit lorsque la puissance de sortie maximale est dépassée.

Voir aussi " Sélection des fonctions avec le commutateur DIP " Page 31

* En cas de conversion avec la prise 20A fournie, modifier l'interrupteur de réglage.

2. Installation and Connection

<BU50SW/BU75SW/BU100SW>

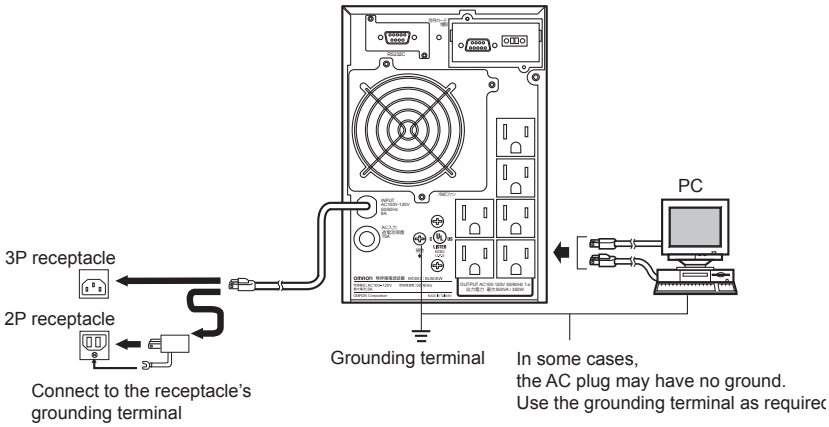

<BU150SW>

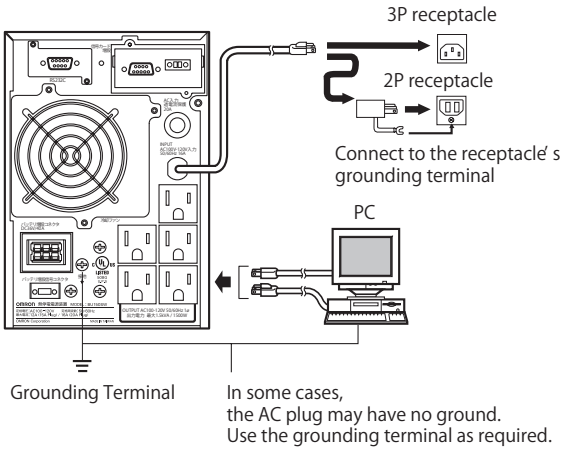

- **The UPS has been charged prior to shipment. However, the backup time becomes shorter when using it for the first time due to spontaneous discharge.**
  We recommend charging the UPS before using it.
  When the AC input plug is connected to a wall outlet (commercial power), the battery automatically starts charging, taking up to 8 hours to complete (24 hours when an additional battery unit is connected).
- **You can perform "2-4 Checking the operation" on page 19 also before charging the battery.**

2-4 Checking the operation

After you finish connecting devices to the unit, make sure the backup function operates properly.
Check that the Battery Mode is performed normally according to the following procedure.
(This operation check simulates a power failure by disconnecting the AC input plug from a wall outlet.)

(1) Turn ON the unit's power switch.

The beeper sounds and the current settings are displayed on the LED.

After 5 secounds, the self-diagnostic test is performed in Battery Mode for approximately 10 seconds.

When the self-diagnostic test finishes successfully, switching to AC output from commercial power is performed and the the display below is shown.

(If the battery voltage is low, the self-diagnostic test is not performed and the operation starts immediately, using output from commercial power.)

(2) Bring all the connected devices into operation.

Status indicator	Description
On	Power switch “ON” Operating normally

(Including devices connected to the AC outlet of your PC.)

Operate the devices in a way in which abrupt power stop does not damage the connected devices, data, etc.

○ON ●OFF ⊗ON, OFF, or blinking depending on status

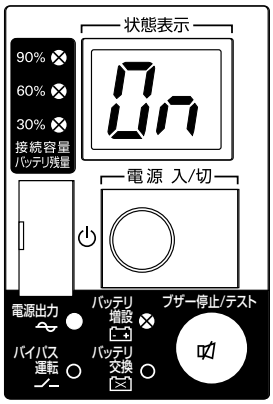

(3) Under this condition, check the the unit's LED display and beep sound.

Are they in the same status as shown below?

Status indicator	On
Beep	None
Power supply output receptacles	Outputs power (connected devices are powered)

If the same as the one shown above: The operation is normal. Proceed to (4).
If not the same as the one shown above: The operation is abnormal. One of the cases described in "4. Display and beeps when there is an equipment failure" of "3-3 Interpreting a beep and displays" on page 26 must apply. Take necessary measures and then proceed to (4).

(4) Disconnect the AC input plug of this unit from a wall outlet (commercial power).

The UPS enters Battery Mode.

(5) In Battery Mode, check the unit's LED display and beep sound.

Does the status indicator appear as one of those shown below?

(` ´ indicates blinking)

Status indicator	Beep	Output	Charging	Description
bU	Intermittent 4-second intervals	ON	OFF Discharging	Backup is operating due to power failure or AC input error. Output will stop if Battery Mode continues.
bL	Intermittent 1-second intervals	ON	OFF Discharging	(Same as above.) Battery level is low, so output will stop soon.
bE	None	OFF	OFF Discharging	Battery is dead, so output stopped. (This is displayed only for a few seconds.)

If not the same as one of those shown above: ➜ Operation is abnormal. Check the status of lamps and beep and turn OFF the Power Switch.

- If the display is one of those shown in “4. Displays and beeps when there is an equipment failure” in “3-3 Interpreting beeps and displays” on page 26, take the necessary measures and then go back to (1) on page 19.
- If no Battery Mode is performed and the UPS and the devices connected to the UPS stop, this may be attributed to an insufficient battery charge.

  After connecting the AC input plug to a wall outlet (commercial power) and waiting at least 8 hours for the battery to charge (24 hours when an additional battery unit is connected), go back to (4) on page 19.
- If the problem persists after checking the 2 points above, contact us; ____

See also Setting switch 1 can be used to turn the beeper ON/OFF. ➛ Page 31

(6) Connect the AC input plug to a wall outlet (commercial power) again.
The status indicator returns to its normal state and the beeping sound stops.
(The status is as shown below.)

Status indicator	Description
On	Power switch “ON” Operating normally

Checking the operation is now complete.

Installation and connection is now complete.

2-5 Charging the battery

When you connect the AC input plug of this unit to a wall outlet (commercial power), the battery charging automatically starts regardless of whether the power switch is ON or OFF, and it is fully charged within 8 hours.

- This unit has been charged prior to shipment. However, the backup time becomes shorter when using it for the first time due to spontaneous discharge. We recommend charging this unit before using it.
- If you do not perform the initial backup time measurement described below in “2-6 Measuring the initial value of backup time”, proceed to “3. Operation”. → Page 22

2-6 Measuring the initial value of backup time

- When you measure the backup time initial value of the unit in your environment, this value can be used as a guide when checking the battery and deciding the UPS monitoring software setting values.
  See also "5. Measuring the backup time" → Page 37

2-7 Recharging the battery

The battery is discharged completely when the backup time is measured, so you need to recharge it before using the UPS.

- You can use connected devices while recharging the battery, but the backup time when a power failure occurs is shorter until the battery is fully charged.
  (If a power failure occurs immediately after the start of charging, backup stops immediately.)
  See also Charge the battery as described in "2-5 Charging the battery."

Preparation for starting operation is now complete.

3 Operation

3-1 Precautions and notes for operation

⚠ Caution (for use)

- Doing so may cause an electric shock or a fire.
- If the unit becomes wet, stop using it and have it inspected and/or repaired.
  For repair, contact us:_____

When the battery is dead, replace it immediately or stop using the unit.

- Continuing the use of it may cause fire or electric shock due to a fluid leak.

Ambient temperature	Expected life
20°C	4 to 5 years
30°C	2 to 2.5 years

* The values in the table are the expected life under standard use conditions and are not guaranteed.

Wipe the AC input plug clean of dirt with a dry cloth occasionally.

- Accumulated dust may cause a fire.

Do not use the unit in a closed place and do not cover the unit.

- Doing so may cause abnormal heating or a fire.

If you notice abnormal sound or smell, smoke, or leakage from the inside, immediately turn OFF the power switch and disconnect the AC input plug from a wall outlet (commercial power).

- Using the unit under such conditions may cause a fire.
- If you notice such a condition, stop using the unit and contact us at _____ for inspection and repairs.
- Use the unit under the conditions in which you can immediately disconnect the AC input plug from a wall outlet (commercial power) in the case of an abnormal event.

If fluid leaks from the unit, do not touch the fluid.

- Doing so may cause blindness or burns.
- If the fluid contacts your eyes or skin, wash it out with lots of clean water and consult your doctor.

Do not place objects heavier than 25kg on the unit, and do not drop heavy objects onto the unit.

- Doing so may cause distortion/damage to the case or a failure of the internal circuit, which may cause a fire.

Notes

Before stopping the commercial power to the unit, turn OFF the power switch of the unit.

- The unit enters Battery Mode when commercial power is stopped. If you frequently use the unit in Battery Mode, the battery life may be significantly shortened.

The output may stop when there is a circuit failure in the UPS.

- Take measures for handling unforeseen accidents, such as data backup and system redundancy.

Explanation

Usual operation

- You may either leave the power switch of the unit ON (operation status) or turn it OFF each time when stopping the connected system. Choose whichever operation method is more convenient. We recommend turning OFF the power switch when you do not use connected devices for a long time.
- The battery can be charged once the AC input plug of the unit is connected to a wall outlet (commercial power).

Quitting Battery Mode

- If a power failure lasts for an extended period of time, the battery discharges and power output from the unit stops. Shut down your computer after performing appropriate procedures (for example, saving data) while the unit is still supplying power.

Rebooting

- If the battery discharges completely during a power failure, the unit stops. After recovery from the power failure, the unit automatically restarts and supplies power. If you do not want to restart the connected devices, turn OFF the power switch of either the unit or the connected devices.

See also Setting switch 2 can be used to select whether or not auto restart is performed. → Page 32

Scheduled operation using the UPS monitoring software

- When performing scheduled operation in which the UPS is stopped and a device such as a breaker is used to stop the UPS at the same time that commercial power stops, specify a period of no more than 3 months for the start of the next operation.
  If you specify a period longer than 3 months, the internal timer is reset and the scheduled operation does not start. Note that this period reduces to approximately half when the battery is dead. If a period of 3 months is exceeded, you start operation by supplying commercial power and pressing the start switch. However, if the battery is dead, you may not be able to start operation.
  In this case, replace the battery according to the instructions in “6-2 Replacing the battery” on page 40.

3-2 Start and stop procedures and basic operation

● When the power switch is OFF and the AC input plug is connected to a commercial power supply :

- The status indicator displays " ▬ ▬".
- Power output is stopped.
- The battery automatically starts recharging.

● Start procedure

Operation **Turn on the power switch of the UPS.**

- Output begins in Bypass Mode about 10 seconds after the switch is activated. (Status indicator " On "). However, " C 1 " is displayed at cold start, and output begins in Battery Mode.
- The beeper sounds and the current setting is displayed on the status indicator.
  Cold start ON/OFF setting ➛ Output voltage setting.(See item 6 on page 29.)
- The status indicator displays " FU ", and the self-diagnostic test is performed in Battery Mode for about 10 seconds. (If the battery voltage is low, the self-diagnostic test is not performed. It is automatically executed after the battery is charged.)
  *1 When the self-diagnostic test finishes successfully, switching to AC output from commercial power is performed and normal operation starts.
  *2 Self-diagnostic test is not performed at cold start.
- When the self-diagnosis test finishes normally, the unit switches to AC output from commercial power and enters normal operation through inverter mode. .

Status indicator	On
Beep	None
Power supply output receptacles	Outputs power (connected devices are powered)

See also Cold start ON/OFF setting ➛ See page 35.

- During operation, the battery is charged automatically.

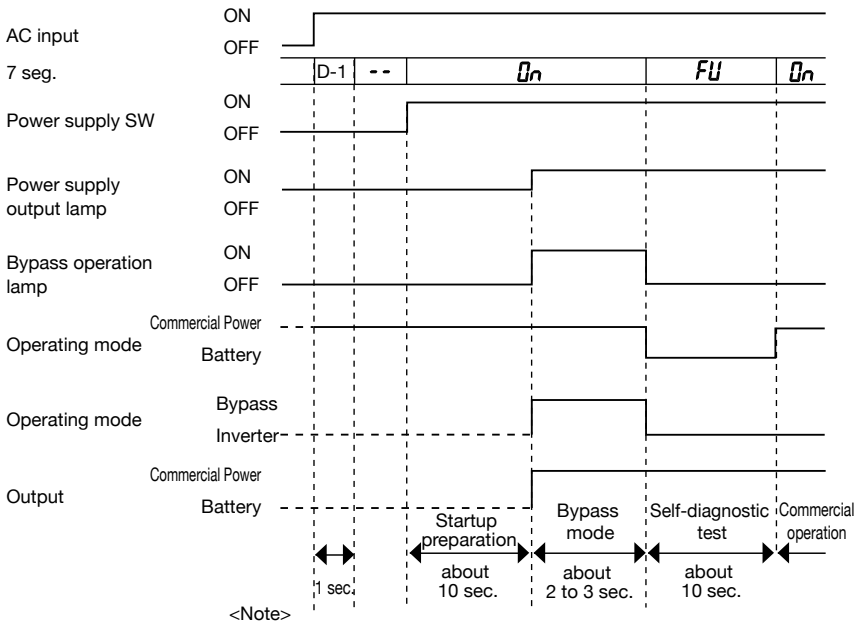

<Note>
D-1 : The most recently displayed error code (refer to item 4 on page 21)
(If no errors have occurred, "- -" is displayed.)

● Operation after a power failure

- If a power failure or abnormal input power supply occurs, the UPS automatically switches to Battery Mode, continuing power output from the Power Supply Output Receptacles supplied from the battery.
- The status is displayed and the beeper sounds intermittently to alert the user.

See also Setting switch 1 can be used to turn the beeper ON/OFF. ➛ Page 31

(`` indicates blinking)

Status indicator	Battery replacement	Beep	Output	Charging	Description	Solution
bU	○	Intermittent 4-second intervals	ON	OFF Discharging	In Battery Mode due to power failure or AC power error.	Perform shutdown operations for the connected devices and stop them.
bL	○	Intermittent 1-second intervals	ON	OFF Discharging	(Same as above.) Battery level is low, so output will stop soon.	(Same as above.)
bE	○	None	OFF	OFF Discharging	Battery is dead, so output stopped. (This is displayed only for a few seconds.)	Charge the battery.

● Operation during recovery from a power failure

- If a power failure or abnormal power input is resolved while the UPS supplies power, it returns to the commercial power output status automatically. Charging the consumed battery starts.
- If a power failure or abnormal power input is resolved after the battery is discharged completely and power output is stopped, the UPS restarts automatically and resumes power output. The expended battery begins to charge.

See also Setting switch 2 can be used to select whether or not auto restart is performed. → Page 32

● Stop procedure

Operation **Turn ON the power switch of the UPS.**

Status indicator	Battery replacement	Beep	Output	Charging	Description
- -	○	None	OFF	ON	There is AC input Power switch “OFF”

- The power output from the UPS stops.
- Even if you turn off the power switch, if AC is supplied from commercial power, the battery is automatically charged.

● Connection capacity/battery level meter

In normal operation, the power consumption of devices connected to the capacity/battery level meter is displayed as a percentage.
BU50SW: Displayed in 3 levels, with 500VA/350W as 100%.
BU75SW: Displayed in 3 levels, with 750VA/500W as 100%.
BU100SW: Displayed in 3 levels, with 1000VA/700W as 100%.
BU150SW: Displayed in 3 levels, with 1500VA/1050W as 100%

When the power consumption of connected devices is 30% or less, the level meter turns OFF.

In Battery Mode, the battery level is displayed as a percentage.

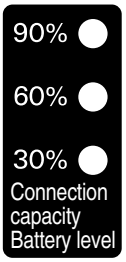

	Connection capacity during normal operation	Battery capacity during Battery Mode
90% ON	90% or more	60% or more
60% ON	60% or more	30 to 60%
30% ON	30% or more	0 to 30%
All OFF	30% or less	—

3-3 Interpreting beeps and displays

(○ indicates the display is OFF)
(● indicates the display is ON)
(: : indicates blinking)

1. Displays and beeps in normal operation

No.	Status indicator	Power supply output lamp	Bypass operation lamp	Battery replacement lamp	Beep	Charging	Description	Solution
1	88	○	○	○	None	OFF	No AC input. Operation stopped.	– –
2	– –	○	○	○	None	ON	There is AC input. Power switch is OFF.	– –
3	On	●	○	○	None	ON	Power switch is ON. Operating normally.	– –

2. Displays and beeps while testing

4	FU	●	○	○	None	OFF Discharging	Self-diagnostic test in progress.	– –
5	bC	●	○	○	None	OFF Discharging	Auto battery test in progress.	– –

(○ indicates the display is OFF)
(● indicates the display is ON)
(⁚ indicates blinking)

3. Displays and beeps during power failure or AC input error

6	bU	●	○	○	Intermittent 4-second intervals	OFF Discharging	In Battery Mode due to power failure or AC input error. Output will stop if Battery Mode continues.	Perform shutdown operations for the connected devices and stop them.
7	bL	●	○	○	Intermittent 1-second intervals	OFF Discharging	(Same as above.) Battery level is low, so output will soon stop.	(Same as above.)
8	bE	○	○	○	None	OFF Discharging	Battery is dead, so output stopped. (This is displayed only for a few seconds.)	Charge the battery.
9	HH	○	○	○	None	(ON)	AC input voltage and AC input frequency are too high.	Use within the AC input voltage/ frequency range described in the specifications.
10	LL	○	○	○	None	(ON)	AC input voltage and AC input frequency are both too low. (Under) Power switch is OFF.	(Same as above.)

4. Displays and beeps when there is an equipment failure

No.	Status indicator	Power supply output lamp	Bypass operation lamp	Battery replacement lamp	Beep	Charging	Description	Solution
11	OL	●	○	○	Intermittent 0.5-second intervals	ON or discharging	There are too many connected devices and the rated capacity is exceeded. If this state continues for as long as or longer than the times described below, commercial power continues to be supplied through bypass operation (Note 1). • When connection capacity is at 100% or higher: Bypass operation begins after 10 seconds • When connection capacity is at 120% or higher: Output stops after 1 minute (Go to No.12) • When connection capacity is at 140% or higher: Output stops after 10 seconds (Go to No.12)	Reduce the number of connected devices until the display appears as in status No. 3.
12	EO	○	○	○	Continuous	ON or discharging	Output stopped due to exceeded connection capacity.	Turn OFF the power switches of all devices connected to the unit, reduce the number of connected devices, and turn the power switch back ON again.
13	ES	○	○	○	Continuous	ON or discharging	Check that the connection capacity has not exceeded the rated capacity	Check that the AC input of connected devices is not short-circuited, or that the connection capacity does not exceed the rated capacity.
14	EF	●	●	○	Continuous	ON or discharging	Switched to bypass operation due to problem with external cooling fan (Note 1).	Replace the cooling fan. See also "6-3 Replacing the fan"→P47 The fan can be replaced while the unit is in operation through the rear panel. Prepare a separately purchased replacement fan (Note 2).
15	EE	– – (Note 3)	– – (Note 3)	○	Continuous	– –	Failure occurred. When the beep stop switch is pressed, the details of the error are displayed (No. 16 to 23).	Turn OFF this unit and all connected devices. Then, turn the power switch back ON for this unit only. If the display does not change, there is a problem with this unit. Contact the shop of purchase or our Electronic Systems & Equipments customer support center at: ____

(○ indicates the display is OFF)
(● indicates the display is ON)
(⁚ ⁚ indicates blinking)

4. Displays and beeps when there is an equipment failure

No.	Status indicator	Power supply output lamp	Bypass operation lamp	Battery replacement lamp	Beep	Charging	Description	Solution
16	E1	●	●	○	Continuous	– –	Switched to bypass operation due to abnormal rise in output voltage (over). (Note 1).	Displays the details of the error that occurred only while pressing the beep stop switch while in state No. 15.
17	E2	●	●	○	Continuous	– –	Switched to bypass operation due to abnormal drop in output voltage (under). (Note 1).	(Same as above.)
18	E3	●	○	○	Continuous	– –	Stopped charging due to abnormal rise in battery charge voltage (over). When the battery discharges, bypass output is performed.	(Same as above.)
19	E4	○	○	○	Continuous	– –	Stopped charging due to short circuit in battery charge voltage.	(Same as above.)
20	E6	●	●	○	Continuous	– –	Switched to bypass operation due to problem with the internal temperature (Note 1).	(Same as above.)
21	E7	●	●	○	Continuous	– –	Switched to bypass operation due to d. c. bus voltage error (Note 1).	(Same as above.)
22	E8	●	●	○	Continuous	– –	Switched to bypass operation due to problem with internal cooling fan. (BU150SW only) (Note 1)	(Same as above.)
23	E9	○ (Note 3)	○ (Note 3)	○	Continuous	– –	(1) Stopped charging due to system error. (2) Another error occurred.	(Same as above.)

Note 1: In bypass operation, commercial power is output directly. Output stops when a power failure (AC input OFF) occurs in bypass operation.
Note 2: Fan replacement performed by the user does not comply with UL standards.
Note 3: The displays and operations vary according to the status.

5. Display and beep for battery replacement

24	On	●	○	⁚●	Intermittent 2-second intervals	ON	The battery test detected a weak battery (warning only, output continues).	Replace the battery. You can replace the weak battery with a separately purchased replacement battery as needed.

(○ indicates the display is OFF)
(● indicates the display is ON)
(: : indicates blinking)

6. UPS operation mode setting display

No.	Status indicator	Power supply output lamp	Bypass operation lamp	Battery replacement lamp	Beep	Charging	Description	Solution
25	C1	—	—	—	—	—	Cold start ON setting. This unit can start even when there is no AC input.	—
26	C0	—	—	—	—	—	Cold start OFF setting. This unit can start up only when there is AC input.	—
27	00	—	—	—	—	—	Output 100V mode. Output voltage is 100V (effective value).	—
28	10	—	—	—	—	—	Output 110V mode. Output voltage is 110V (effective value).	—
29	15	—	—	—	—	—	Output 115V mode. Output voltage is 115V (effective value).	—
30	20	—	—	—	—	—	Output 120V mode. Output voltage is 120V (effective value).	—

4 UPS functions

4-1 Suspending a beep

When the beep is sounding, you can suspend it by pressing and holding the beep stop/test switch for 0.5 seconds or longer.

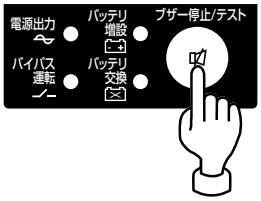

4-2 Testing the UPS (Self-diagnosis test)

This test performs a failure diagnosis on the unit and performs a simple test to check for battery deterioration. Use the procedure below to check whether a circuit failure has occurred inside the unit and whether battery replacement is required.

> If the battery is not fully charged, the self-diagnostic test is not executed immediately.
> After charging is complete, it is automatically executed.

(1) Connect your computer and other devices to the UPS and then turn ON the power switch of the UPS.

(2) The Battery Mode starts for testing purpose automatically (Status indicator "FU"). (No beep sounds.)
After about 10 seconds, when the test is complete the normal operation automatically starts.

(3) If the status indicator/battery replacement lamp blinks and the beeper sounds:
See also "3-3 Interpreting beeps and displays" ➛ Page 26
Follow the directions for the solutions described in "4. Displays and beeps when there is an equipment failure" and "5. Display and beep for battery replacement".

> * This test can also be run from the included UPS monitoring software.
> For more details, refer to the online help for the UPS monitoring software.

> This test can also be performed manually.
> Press and hold the Beep Stop/Test Switch of the UPS for 10 second or longer.
> When the beeper begins to sound intermittently, release the Switch.

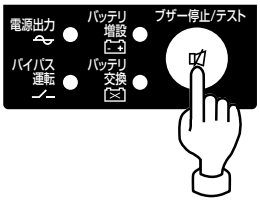

4-3 Description of the auto battery test function

This test performs a failure diagnosis on the unit and checks for battery deterioration (it tends to detect battery deterioration earlier than the self-diagnostic test does). This test is performed automatically. (You do not have to perform any special operations.)

The test is performed once every 4 weeks after the AC input is connected to commercial power and power distribution begins. The test is not performed if the power switch is OFF or if the battery is not fully charged.

The test is not performed if the power switch is OFF or if the battery is not fully charged.

(1) When the auto battery test starts, the Battery Mode automatically starts (Status indicator "bC"). (No beep sounds.) After the auto battery test is complete, the normal operation automatically starts.

(2) If the status indicator/battery replacement lamp blinks and the beeper sounds:

See also "3-3 Interpreting beeps and displays" ➛ Page 26

Follow the directions for the solutions described in "4. Displays and beeps when there is an equipment failure" and "5. Display and beep for battery replacement".

> The setting switch on the Front of the UPS allows you to select the "disable the auto battery test" setting.
>
> "4-4 Changing the setting of the functions" ➛ Page 31
> See "Setting for whether or not to perform battery test."

4-4 Changing the setting of the functions

1. Selecting the function using setting switches

After changing the setting switch, turn the power switch back ON with the AC input plug connected to the wall outlet.

- Otherwise, the change you made will not take effect.
- Use a fine-pointed tool such as a small screwdriver to maneuver the switch's lever.

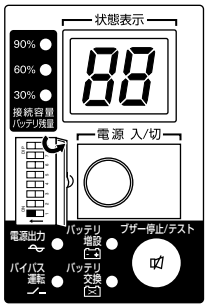

● Beeper ON/OFF setting (setting switch 1) ··· Factory setting: OFF

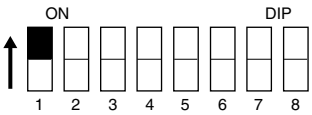

OFF: The beeper sounds when an alarm is necessary.

ON: The beeper does not sound for backup operation or battery replacement. The beeper sounds for other errors (connection capacity exceeded, operation error, etc.).

● Auto restart setting (setting switch 2) ··· Factory setting: OFF

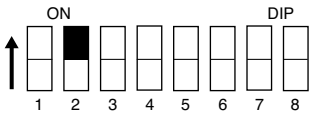

OFF: Automatically restarts when power is restored.

After a power failure occurs and the UPS is shut down using the shutdown software or contact signal, the UPS automatically starts up and begins to output when the commercial power is restored.

ON: Does not automatically restart when power is restored.

After the unit is shut down with the UPS monitoring software or contact signal, it does not start up when commercial power is restored. Startup is performed manually by turning the power switch OFF and back ON again.

● Auto battery test ON/OFF setting (setting switch 3) ··· Factory setting: OFF

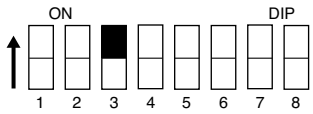

OFF: The battery test is automatically executed once every 4 weeks.

ON: The auto battery test is disabled.

Use this setting to disable Battery Mode for for the regularly performed auto battery test.

● Auto startup mode setting (setting switch 4) ··· Factory setting: OFF

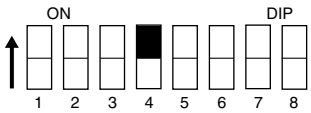

OFF: (Mode A) After UPS stopped, the UPS is automatically started immediately when “ON” is detected for the AC input.

ON: (Mode B) After UPS stopped, the UPS is automatically started in the AC input’s “OFF to ON” timing that is detected.

(Definition of AC input OFF: When AC input is OFF for 1 second or more)

* Setting switch 4 is valid when the auto startup after recovery from power failure setting (setting switch 2) is set to OFF (auto restart is performed).
* This setting mode is valid only after the UPS has been stopped by the contact signal backup stop signal (BS).
* When a cable is connected to the RS-232C connector and the UPS monitoring software is used, the unit operates in Mode A regardless of this setting.

(1) When BS signal is used to stop the UPS after a power failure occurs (1)-1.

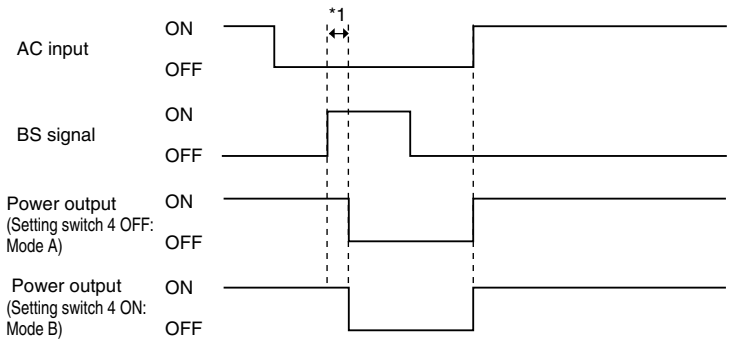

(2) When BS signal is used to shut down the UPS when AC input is ON

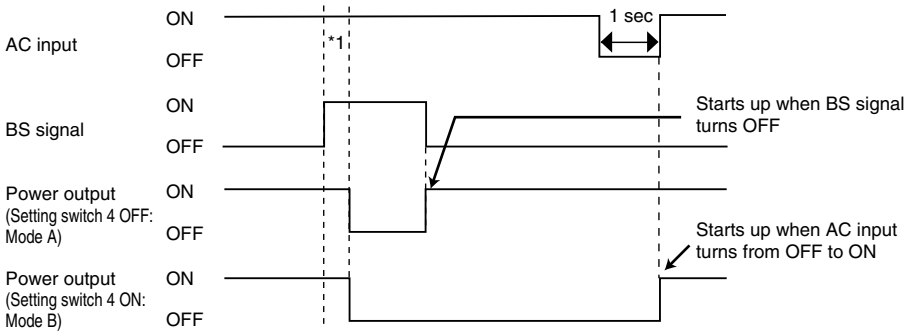

* 1: BS signal reception time corresponds to the setting switch 7 .

● Power output stop delay time setting (setting switches 5 and 6) ··· Factory setting: OFF and OFF

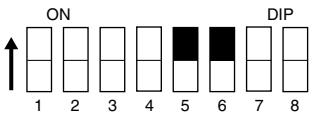

Setting switch 5	Setting switch 6	Power output stop delay time
OFF	OFF	0 second
ON	OFF	60 seconds
OFF	ON	120 seconds
ON	ON	Does not stop power output

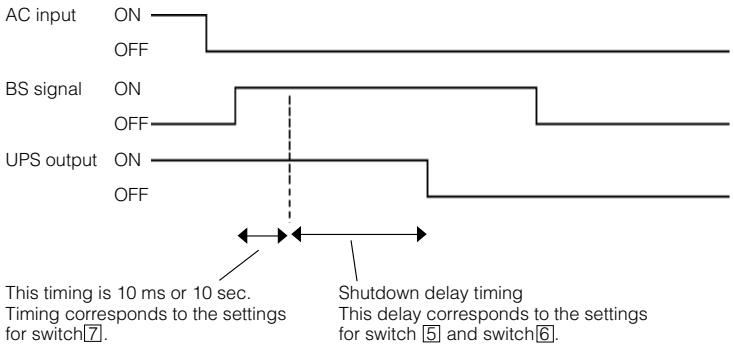

The UPS delays the shutdown timing.
If the user sets “switch 5: ON, switch 6: ON”, the UPS does not stop the output, even if the backup power supply stop signal (BS) is valid.

<Note>

The remote ON/OFF signal is not related to this setting.

When the remote ON/OFF signal is “High”, the UPS stops the output immediately.

● UPS stop signal setting (BS) (setting switch 7) ··· Factory setting: OFF

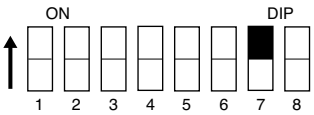

OFF: The BS signal is always valid (raceivable).
The unit’s “power output” can be stopped by inputting a “ON” backup power supply stop signal (BS) that continues for 10 seconds or more..

ON: The BS signal is valid (raceivable) only when in Battery Mode.(The signal is not received when in Commercial Power Mode.)
The unit’s “power output” can be stopped by inputting a “ON” backup power supply stop signal (BS) that continues for 0.01(10ms) seconds or more.
Use this setting in commercial operation when you do not want to stop operations when a backup power supply stop signal (BS) is received

.

● 15A/20A plug setting (setting switch 8) ···Factory setting: OFF (BU150SW only)

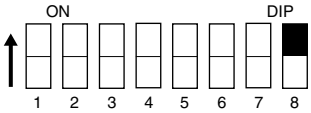

OFF: Set to OFF when using a 15A AC input plug. The UPS can connect to as much as the “rated output capacity (1100VA/950W)” for a 15A plug.

ON: Set to ON when using a 20A AC input plug. The UPS can connect to as much as the “rated output capacity (1500VA/1050W)” for a 20A plug.

* Valid only when using contact signal interface.

2. UPS operation mode settings

The settings available for this operation are shown below.

- Cold start ON/OFF setting

  When ON, it is possible to start up the unit even when there is no AC input plug.
  (It is not possible, however, to start up the unit by the remote signals.)
  Normal operation occurs when AC input is ON. The output frequency is the same as the frequency the last time there was AC input.

- Output voltage setting (100V/110V/115V/120V)

  Four types of output voltage can be set.
  Output is performed at the set voltage, with no relation to the input voltage.

The UPS operation mode can be set if the power switch is turned ON while the beep stop/test switch is pressed.
Note: While in setting mode, output from the output receptacles are OFF, even if the power switch is ON.

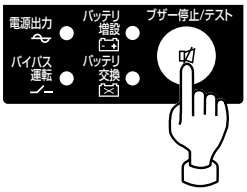

How to make settings:

There are 2 items to select.

1) Cold start ON/OFF setting 2) Output voltage setting

(1) When the beep stop/test switch is pressed (for less than 3 seconds), the next item is displayed.

Cold start ON/OFF setting → Output voltage setting

(2) Setting mode starts if the beeper stop switch is held (for more than 3 seconds).

(3) When the power switch is turned OFF, setting mode quits and it returns to normal status (Status No.2).

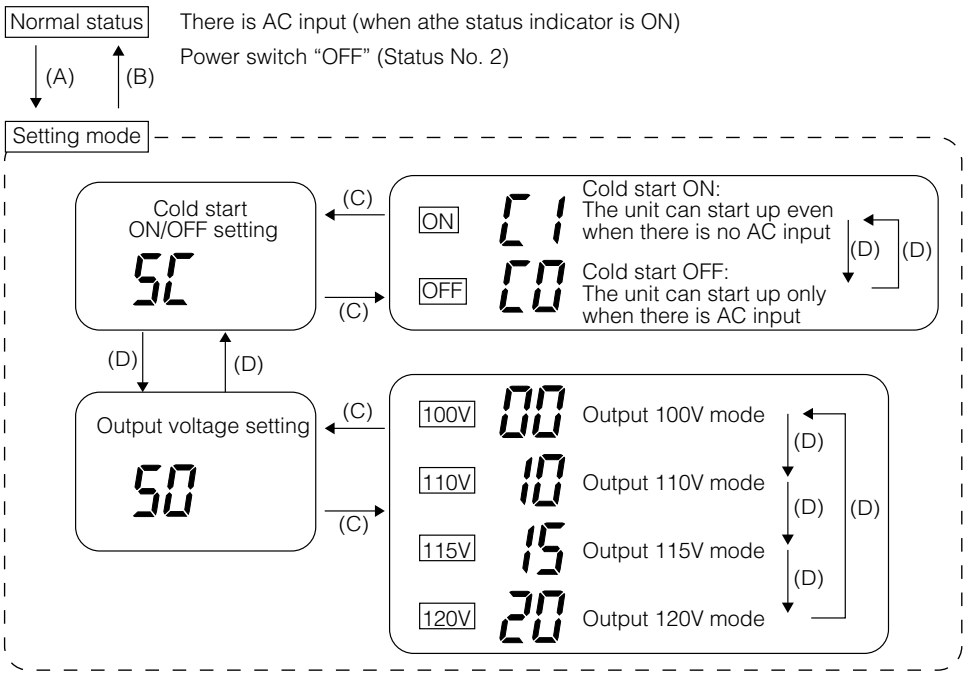

(A) Turn ON the power switch while the beep stop/test switch is pressed.
(B) Turn OFF the power switch.
(C) Press and hold the beep stop/test switch (for more than 3 seconds).
(D) Press the beep stop/test switch (for less than 3 seconds).

5 Measuring the backup time

5-1 How to measure backup time

(1) When the AC input plug is connected to a wall outlet (commercial power), the battery automatically starts charging, taking up to 8 hours to complete (24 hours when an additional battery unit is connected).

(2) Turn ON all devices connected to the power output to be “backed up during a power failure”.
(This includes devices connected to the AC outlet of your computer.)
Operate the connected devices in a way that allows the power supply to be stopped at any time.

- **For Windows Server 2003/Vista/XP/Me/2000/Windows NT/Linux:**
  Perform measurement while the hard drive is stopped.
- **For Windows 98/95:**
  Choose "Shut Down" in Windows and follow the procedure below to shut down your OS.
  Choose "Restart in MS-DOS mode" to exit from OS and display the MS-DOS mode screen.

(3) Disconnect the AC Input Plug of the UPS and measure the backup time.
Measure the time until the unit automatically stops and all displays disappear with the plug disconnected.

* The backup time you measure for the first time after purchase is the "initial value of the backup time."

5-2 Estimated backup time

The backup time varies depending on the capacity of connected devices.
After calculating the total capacity of connected devices, refer to the graph of the backup time to obtain an estimation of the initial value of the backup time. (This is also applied to checking the battery.)

(1) Convert the total capacity (power consumption) of the connected devices to watts (W).
For the indication of connected devices, check your computer and the rear of the display.
The indicator can show values in three different ways: volt-amperes (VA), amperes (A), and watts (W).

Example 1) 100 VAC, 50/60Hz, 145 W
Example 2) 100 VAC, 50/60Hz, 1.8 A
Example 3) 100 VAC, 50/60Hz, 150 VA

Indication	Value
VA	× power factor = W
A	× power factor × 100 = W

For devices that use the VA or A indication, convert the capacity into W. Multiply the value indicated on devices by the value in the right table for conversion.

(When the power factor is unknown, enter “1”. The power factor usually ranges between 0.6 and 1.)

(2) Add the values converted into W to obtain the total capacity of the connected devices.

(3) Calculate the initial value of the backup time for the total capacity of the connected devices from the graph below.

- Graph of backup time (graph of initial values for products that have not been used)
- The smaller the capacity of connected devices becomes, the longer the backup time becomes.

5. Measuring the backup time

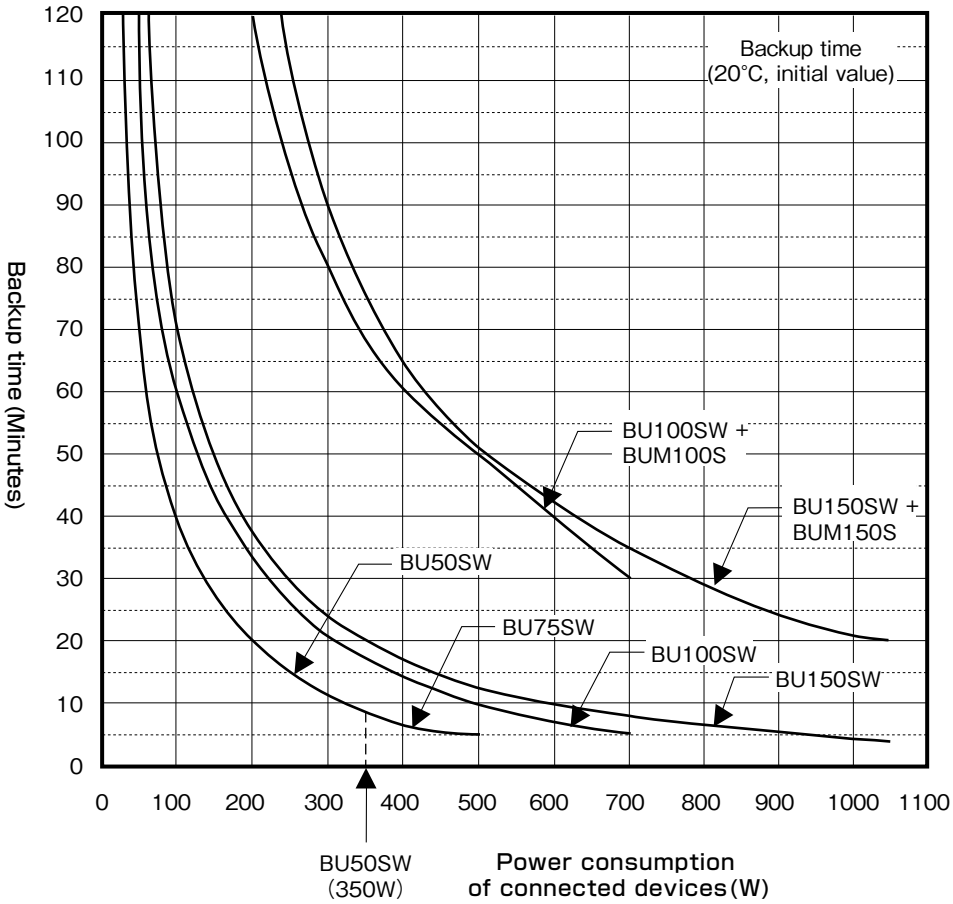

Time unit: Minutes

Model	20W	50W	100W	200W	300W	400W	500W	700W	1000W	1400W
BU50SW	120	75	40	20	12	8 (350W)	-	-	-	-
BU75SW	120	75	40	20	12	7	5	-	-	-
BU100SW	180	120	60	35	20	15	10	5	-	-
BU100SW+ BUM100S	720	420	240	120	80	60	50	30	-	-
BU150SW	210	150	70	37	23	17	12	8	4.2	4 (1050W)
BU150SW+ BUM150S	740	440	260	140	90	65	51	35	21	20(1050W)

* These backup times are for reference only. Times may vary according to battery life and external environmental conditions (temperature, etc.).

6 Measuring and Inspection

⚠ Caution (for maintenance)

When maintaining the connected equipment, turn OFF the power switch and disconnect the AC input plug.

- Even if you disconnect the AC input plug while the UPS is operating, the power output of this unit does not stop and power is supplied from the outlet during a power failure.

Do not disassemble, repair, or modify the unit.

- Doing so may cause an electric shock or a fire.

If fluid leaks from the unit, do not touch the fluid.

- Doing so may cause blindness or burns.
- If the fluid contacts your eyes or skin, wash it out with lots of clean water and consult your doctor.

Do not throw the unit into fire.

- The lead battery in the unit may explode, or leak dilute sulfuric acid.

Do not insert metal objects into the power supply output receptacles of the UPS.

- Doing so may result in electric shock.

Do not insert metal objects into the battery connectors.

- Doing so may result in electric shock.

⚠ Attention (pour l'entretien)

Lors de l'entretien de l'équipement connecté, couper l'interrupteur d'alimentation et débrancher la fiche d'entrée AC.

- Même si la fiche d'entrée AC est débranchée alors que l'ASC fonctionne, l'alimentation de sortie de l'appareil n'est pas interrompue et il est alimenté à partir de la prise lors d'une panne de courant.

Ne pas démonter, réparer ou modifier l'appareil.

- Cela peut provoquer un choc électrique ou un incendie.

Si des fuites de liquide depuis l'appareil se produisent, ne pas toucher ce liquide.

- Cela peut provoquer la cécité ou des brûlures.
- Si le liquide entre en contact avec les yeux ou la peau, rincer abondamment à l'eau claire avant de consulter un médecin.

Ne pas jeter l'appareil au feu.

- La batterie au plomb dans l'appareil peut exploser ou laisser fuir de l'acide sulfurique dilué..

Ne pas insérer d'objets métalliques dans les prises de sortie d'alimentation électrique de l'ASC.

- Cela peut provoquer un choc électrique.

Ne pas insérer d'objets métalliques dans les connecteurs de la batterie.

- Cela peut provoquer un choc électrique.

6-1 Checking the battery

The sealed lead battery used in the unit has a limited life.
(The life varies depending on your storage/use environment and backup frequency.)
The nearer the end of the life is, the more rapidly deterioration proceeds.

1. Life of battery (estimated replacement timing)

Ambient temperature	Life of battery	Replacement estimation
20°C	4 to 5 years	4 to 5 years after staring use
30°C	2 to 2.5 years	2 years after staring use

2. Methods for checking the battery

There are 3 methods for checking the battery.

- Perform a self-diagnostic test. (See page 30.)
- Use the auto battery test function. (See page 31.)
- Measure the backup time. (See page 37.)

By measuring the backup time, the battery life can be determined more accurately.

See also Measure the backup time according to "5-1 How to measure backup time"
➛ Page 37

If the measured value is equal to the "initial value of the backup time" or less than half the value obtained from the graph of "Estimated backup time" on page 37, replace the battery.

- When you compare the "initial value of the backup time" you measured and the current backup time, make the capacity of devices connected to the UPS same as when you measured the initial value to make judgment accurately.

3. Guidelines for how often to check the battery (measure the backup time)

Ambient temperature	Check once every 6 months	Check once a month
20°C	For the first 3 years after purchase	When 3 or more years have passed since purchase
30°C	For the first 1.5 years after purchase	When 1.5 or more years have passed since purchase

*** The battery deteriorates even if it is stored. The higher the temperature is, the shorter the life becomes.**

6-2 Replacing the battery

The battery can be replaced either while the unit is stopped (power supply output stopped) or while it is in operation (outputting power supply).

⚠ Caution

When the unit is used in compliance with UL standards, do not replace the battery while in operation (while power is being output). Replacing the battery while in operation does not comply with UL standard. Make sure to stop the operation of the unit before replacing the battery.

* When replacing the battery, stop the connected devices, turn OFF the power switch of the UPS, and disconnect the AC input plug from the wall.
* If an input power supply error such as a power failure occurs when replacing the battery while in operation, backup cannot be performed and output stops.
* Do not replace the battery during backup operation. Output will stop.

⚠ Caution (for battery replacement)

Perform replacement on a stable and flat place.

- Handle the battery carefully so that you do not drop it.
- Not doing so could cause injury or burns due to liquid (acid) leakage.

Use a specified battery for replacement.

- Not doing so may cause a fire.
- Product model: BP70XS (Replacement battery pack for BU50SW/BU75SW)
  BP100XS (Replacement battery pack for BU100SW)
  BP150XS (Replacement battery pack for BU150SW)

Do not replace the battery in a place where there is flammable gas.

- Spark may occur when connecting the battery, which may cause an explosion or fire.

If fluid (dilute sulfuric acid) leaks from the battery, do not touch the fluid.

- Doing so may cause blindness or burns.
- If it contacts your eyes or skin, wash it out with lots of clean water and consult your doctor.

Do not disassemble or modify the battery.

- Doing so could cause dilute sulfuric acid leak, which could cause blindness and burns.

Do not drop the battery and do not expose it to strong impact.

- Dilute sulfuric acid may leak.

Do not short the battery with metal objects.

- Doing so could cause an electric shock, fire or burn.
- Some electrical energy still remains inside the spent battery.

Do not put the battery into fire and do not break it.

- The battery may explode or leak dilute sulfuric acid.

Do not use a new battery and an old battery at the same time.

- Dilute sulfuric acid may leak.

- A battery can present a risk of electrical shock and high short circuit current.The following precautions should be observed when working on batteries:
  1) Remove watches, rings, or other metal objects from the hands.
  2) Use tools with insulated handles.
  3) Wear rubber gloves and boots.
  4) Do not lay tools or metal parts on top of batteries.
  5) Disconnect charging source prior to connecting or disconnecting batteries terminals.
- Servicing of batteries should be performed or supervised by personnel knowledgeable of batteries and the required precautions. Keep unauthorized personnel away from batteries.

La batterie peut être remplacée pendant que l'appareil est à l'arrêt (alimentation électrique de sortie arrêtée) ou lorsque l'appareil est en marche (alimentation électrique en cours de sortie).

Attention

Lorsque l'appareil est utilisé conformément aux normes UL, ne pas remplacer la batterie en cours de fonctionnement (lorsque l'appareil est en cours de sortie). Le remplacement de la batterie pendant le fonctionnement n'est pas conforme aux normes UL. S'assurer d'arrêter l'appareil avant de remplacer la batterie.

* Lors du remplacement de la batterie, éteindre les appareils connectés, couper l'interrupteur d'alimentation de l'ASC et débrancher la fiche d'entrée AC du mur.
* Si une erreur d'alimentation d'entrée comme une panne de courant se produit lors du remplacement de la batterie pendant que l'appareil est en marche, le fonctionnement autonome ne peut se déclencher et la sortie est alors interrompue.
* Ne pas remplacer la batterie pendant le fonctionnement autonome. La sortie sera alors interrompue.

Attention (pour le remplacement de la batterie)

Effectuer le remplacement à un endroit stable et plat.

- Manipuler soigneusement la batterie afin de ne pas la laisser tomber.
- Ne pas le faire peut entraîner des blessures ou des brûlures dues au liquide (acide) de fuite.

Utiliser une batterie spécifiée pour le remplacement.

- Ne pas le faire peut provoquer un incendie.
- Modèle du produit: BP70XS (batterie de rechange pour BU50SW/BU75SW)
  BP100XS (batterie de rechange pour le BU100SW)
  BP150XS (batterie de rechange pour le BU150SW)

Ne pas changer la batterie en présence de gaz inflammable.

- Une étincelle peut se produire lors de la connexion de la batterie, ce qui peut provoquer une explosion ou un incendie.

Si du liquide (acide sulfurique dilué) fuit de la batterie, ne pas toucher ce liquide.

- Cela peut provoquer la cécité ou des brûlures.
- S'il entre en contact avec les yeux ou la peau, rincer abondamment à l'eau claire avant de consulter un médecin.

Ne pas démonter ou modifier la batterie.

- Cela peut entraîner une fuite d'acide sulfurique dilué, ce qui peut causer la cécité et des brûlures.

Ne pas faire tomber la batterie ni l'exposer à des chocs violents.

- Une fuite d'acide sulfurique dilué peut se produire.

Ne pas court-circuiter la batterie avec des objets métalliques.

- Cela peut entraîner un choc électrique, un incendie ou des brûlures.
- Une batterie usagée peut encore contenir de l'énergie électrique.

Ne pas jeter la batterie au feu ni la briser.

- La batterie peut exploser ou connaître une fuite d'acide sulfurique dilué.

Ne pas utiliser simultanément une batterie neuve et une batterie usagée.

- Une fuite d'acide sulfurique dilué peut se produire.

⚠ Attention (pour le remplacement de la batterie)

- Une batterie peut présenter un risque de choc électrique et de courant élevé de court-circuit.
  Les précautions suivantes doivent être observées lors des interventions sur les batteries :
  1) Retirer les montres, bagues ou autres objets métalliques des mains.
  2) Utiliser des outils pourvus de poignées isolées.
  3) Porter des gants et bottes en caoutchouc.
  4) Ne pas poser d'outils ou de pièces métalliques sur les batteries.
  5) Débrancher la source de chargement avant de connecter ou déconnecter les bornes des batteries.
- L'entretien des batteries doit être effectué ou supervisé par un personnel connaissant bien les batteries et les précautions nécessaires. Tenir le personnel non autorisé à l'écart des batteries.

Notes

Battery recycling

The unit uses lead acid batteries, which are a valuable recyclable resource. Please recycle. For information on recycling, please contact our Electronic Systems & Equipments repair center.

Pb

■ Procedure for recycling the battery

1. Use a screwdriver to loosen (turn clockwise) the 2 screws at the top of the front panel of the unit, until they turn freely. (The screws cannot be removed from the front panel.) ①
Pull the front panel towards you to remove it. ②

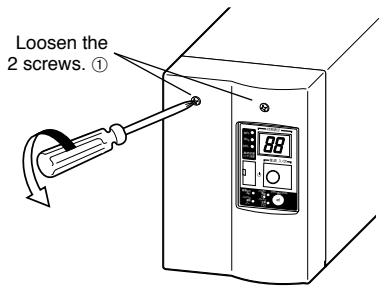

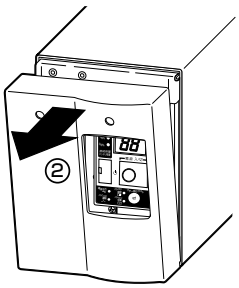

2. Remove the battery connector from the plate cover ① and disconnect the connector. ②

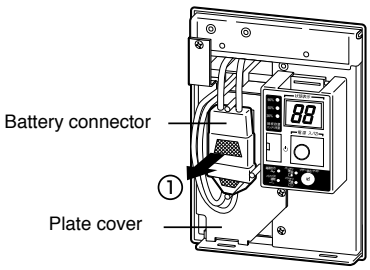

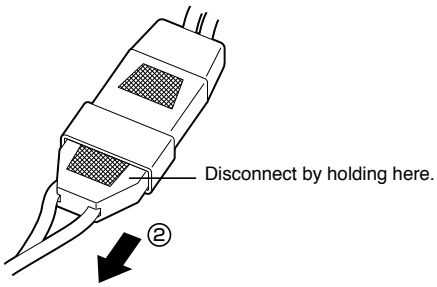

3. Turn the 2 screws that fix the plate cover counterclockwise to remove them. ①
Pull the plate cover towards you ② and lift it up to remove it. ③

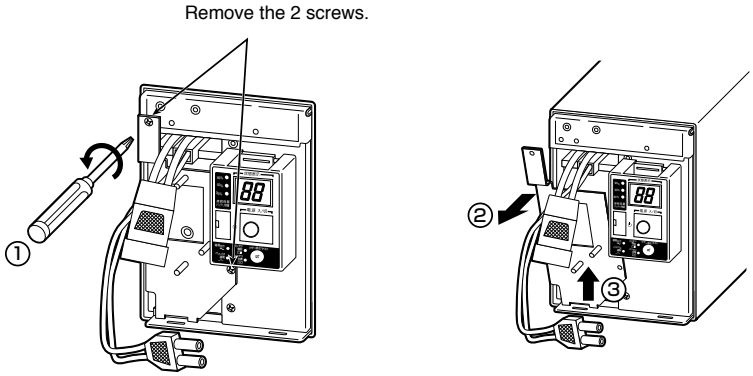

4. Hold the pullout label at the bottom of the battery pack and remove the battery pack.

Do not hold the connector or cable of the battery pack.

Use the red tape on the top of the battery pack, which is 10 cm from the inner edge of the battery, to gauge how much further you need to pull the battery to remove it. Hold the battery securely with both hands so as not to drop it.

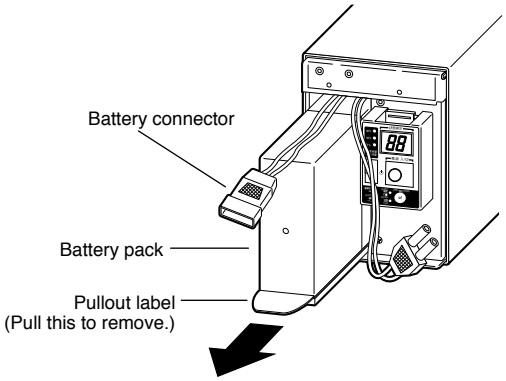

5. Insert a new battery into the UPS as far as it will go. ①

● Replacement battery pack

For BU50SW/BU75SW: Model BP70XS
For BU100SW: Model BP100XS
For BU150SW: Model BP150XS

Attach the plate cover.

Insert the lug at the bottom of the cover into the hole in the main body ② and push it towards the main body. ③

Use a screwdriver to securely tighten (clockwise) the 2 screws you removed. ④

Do not pinch the cable with the plate cover.

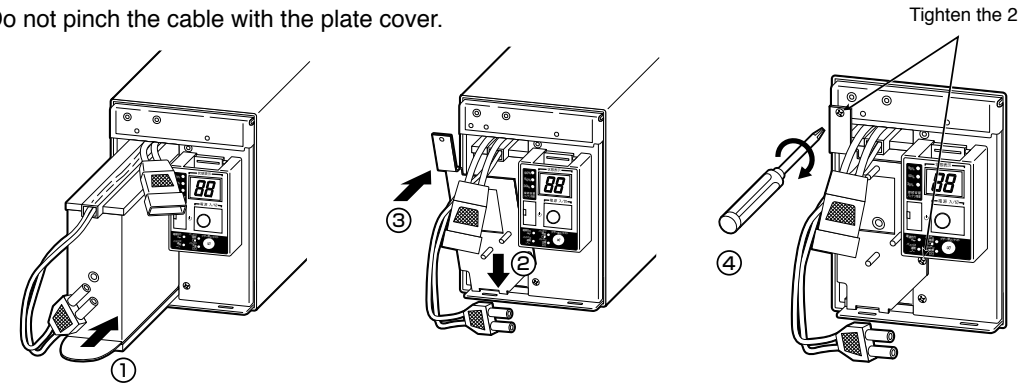

6. Insert the connector until it is locked. ①

Secure the connector to the plate cover. ②

You may hear a "pop" sound when you connect the battery if it is replaced after the unit's operation is stopped, but this sound is not abnormal.

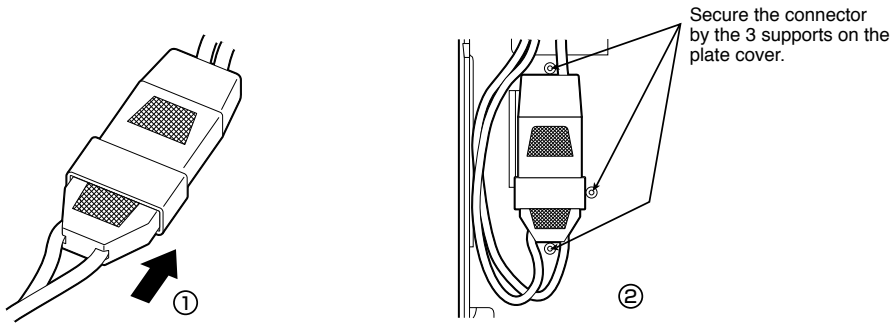

If you cannot secure the connector to the plate cover, the connector is not inserted completely.
Insert the connector again.

7. Attach the front panel.
Insert the lug at the bottom of the front panel into the hole in the main body ① and push it towards the main body. ②

Use a screwdriver to securely tighten (clockwise) the 2 screws at the top of the front panel. ③

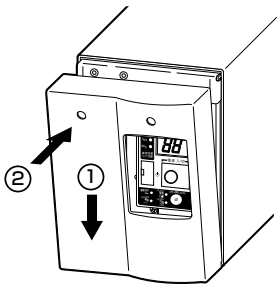

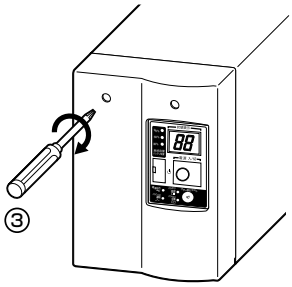

8. Battery replacement is now complete.

<After replacing the battery during operation...>
Press the beep stop/test switch for 0.5 sec. to perform a self-diagnostic test. Normal operation resumes after the 10-second test. If the beeper is sounding, it will stop the first time the switch is pressed. Press the switch again to start the test. If the battery replacement display and beeper were activated before replacing the battery, the display and beeper stop after the test is complete, and normal operation resumes.

<After replacing the battery when operation was stopped...>
Connect the AC input plug to a wall outlet (commercial power) and turn ON the power switch of the UPS. When operation starts, the self-diagnostic test is automatically performed. Normal operation resumes after the 10-second test.

Write the usage start date on the label on the front. Also, by using the included UPS monitoring software, possible to keep a record of usage start date by the software.

6-3 Replacing the fan

The fan in the unit has an expected lifespan of approximately 5 years.
Replace it when the Error Lamp is lit and the fan is stopped.

⚠ Caution

When this product is used in compliance with UL standards, do not replace the fan.

● Fan replacement does not comply with UL standards.

The fan can be replaced while the unit is in operation (power supply is being output) or while the unit is stopped (power supply output is stopped). Choose whichever replacement method is more convenient.

* If the fan stops or is removed while the unit is in operation, the "EF" lamp blinks, the beep sounds continuously, and output is supplied through bypass operation.
  In this state, if an input power supply error occurs due to a power failure or other reason, the unit stops without entering Battery Mode.
* Do not replace the fan while in Battery Mode.
  The unit will stop.

In addition to the fan on the back of the BU150SW, there is an internal fan.
When ' E8 ' blinks on the status indicator, the internal fan needs to be replaced.
For details on replacing the internal fan, contact the Electronic Systems & Equipment repair center.

6

⚠ Attention

Lorsque ce produit est utilisé en conformité avec les normes UL, ne pas remplacer le ventilateur.

● Le remplacement du ventilateur n'est pas conforme aux normes UL.

Le ventilateur peut être remplacé pendant que l'appareil est en marche (alimentation électrique en cours de sortie) ou lorsque l'appareil est à l'arrêt (alimentation électrique de sortie arrêtée). Choisir la méthode de remplacement la plus commode.

* Si le ventilateur s'arrête ou est retiré alors que l'appareil est en marche, la lampe "EF" clignote, le signal sonore retentit de façon ininterrompue, et la sortie est fournie via l'opération de dérivation.
  Dans cet état, si une erreur d'alimentation d'entrée se produit à cause d'une panne de courant ou pour toute autre raison, l'appareil s'arrête sans passer en Mode batterie.
* Ne pas remplacer le ventilateur pendant le Mode batterie.
  L'appareil va s'arrêter.

Outre le ventilateur à l'arrière du BU150SW, il y a également un ventilateur interne.
Lorsque "E8" clignote sur l'indicateur d'état, le ventilateur interne doit être remplacé.
Pour de plus amples détails sur le remplacement du ventilateur interne, contacter le centre de réparation des systèmes et équipements électroniques.

■ Precautions when replacing the fan

Warning

Do not insert your hand or metal objects into the fan recess.
- Doing so may cause electric shock or short-circuit.

Do not put your fingers into the fan.
- The fan spins when the AC input plug is connected to a wall outlet (commercial power).
- Doing so may result in injury.

Avertissement

Ne pas insérer la main ou des objets métalliques dans les interstices du ventilateur.
- Cela peut provoquer un choc électrique ou un court-circuit.

Ne pas mettre les doigts dans le ventilateur.
- Le ventilateur tourne lorsque la fiche d'entrée AC est branchée à une prise murale (alimentation secteur).
- Cela peut entraîner des blessures.

■ Fan replacement procedure

1. Use a screwdriver to loosen (turn counter-clockwise) and remove the 3 cooling fan screws on the back of the unit. ①
Pull the cooling fan toward you to remove it. ②

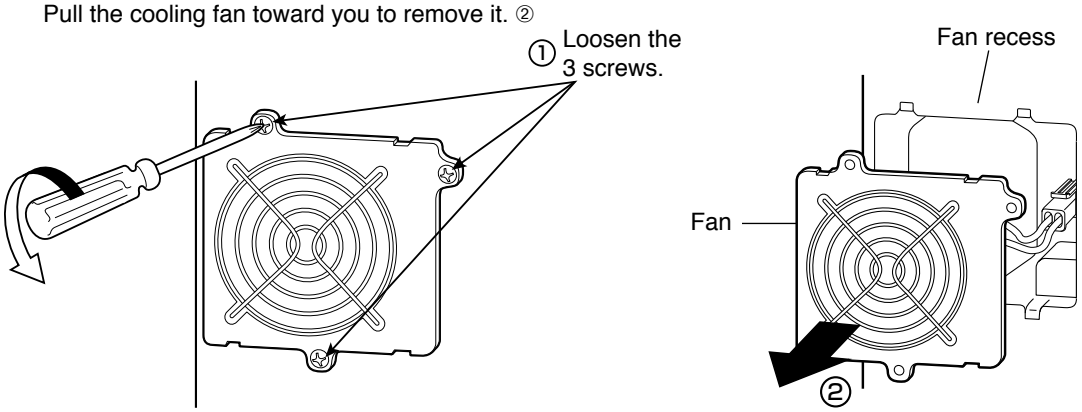

2. While pressing down on the tip of the fan connector ①, pull it toward you to disconnect it. ②
The beep stops, and the error lamp turns OFF.

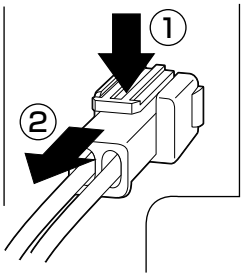

3. Insert the new fan connector until it clicks into place. ③
The beep stops, and the "EF" status display lamp turns OFF.

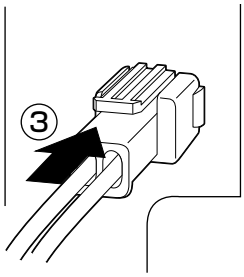

- Replacement fan
  BU50SW/BU75SW : Model BUF75S
  BU100SW/BU150SW : Model BUF100S

4. Insert the fan into the unit's fan recess. ①
Use a screwdriver to securely tighten (turn clockwise) the 3 removed screws. ②
When doing so, make sure the cable does not become pinned under the fan cover.

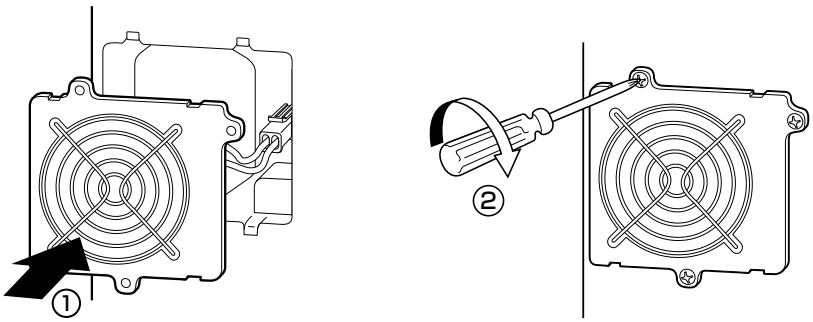

Fan replacement is complete.

6-4 Cleaning

1. Cleaning the UPS

Moisten a soft cloth with water or detergent, squeeze it tightly, and wipe the product lightly.

Do not use chemicals such as thinner and benzene. (They cause deformation or discoloration.)

2. Removing dust from the AC input plug of the UPS

Stop all the connected devices and the UPS and disconnect the AC input plug from a wall outlet (commercial power).

Then, remove dust with a dry cloth and make the connection again.

(For information on the connection procedure:)

See also "2-3 Connecting the equipment" ➛ Page 15

7 Using the UPS monitoring software and contact signal

*** If you do not use the UPS monitoring software and contact signal, this step is not required.**

■ UPS monitoring software

"PowerAct Pro", "Simple Shutdown Software" and "UPS service driver" UPS monitoring software is included with this product. Choose which one to use based on the application. Refer to our homepage for details about compatibility.

• UPS monitoring software correspondence table for each OS

https://www.oss.omron.co.jp/ups/product/soft/os_ups_sentaku.pdf

• You can download the latest software at:

https://www.oss.omron.co.jp/ups/support/download/download.html

7-1 When using the included UPS monitoring software to perform auto shutdown

●When using PowerAct Pro (4.x/3.x) softwaresing PowerAct Pro

The included “PowerAct Pro (4.x/3.x) “software allows you to automatically save files and perform shutdown processing of your PC when a power failure occurs. (It is possible to shut down multiple computers on the network.)

Also, you can perform desired operation by setting the automatic start/stop of the battery mode operation based on the scheduled setting.

* The time between the occurrence of a power failure and the shutdown of your PC must be within the backup time measured in “5-1 How to measure backup time” on Page 37.
For more information and operation, refer to the “Quick Installation Guide for UPS Monitoring Software” and the online help in the included CD-ROM.

1. Connect the UPS to a computer.

Cable: Included connection cable (RS-232C)

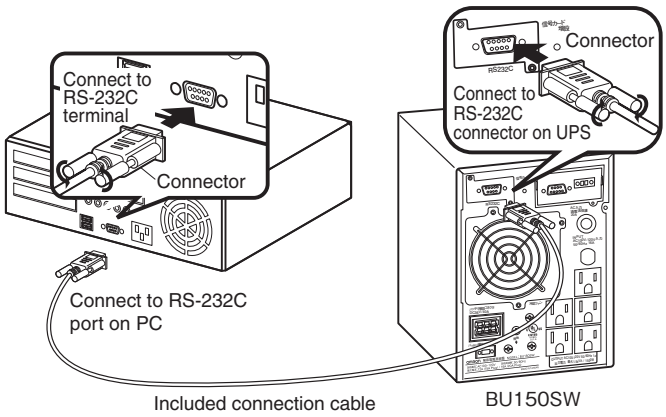

⁎When connecting 2 or more computers to the UPS.

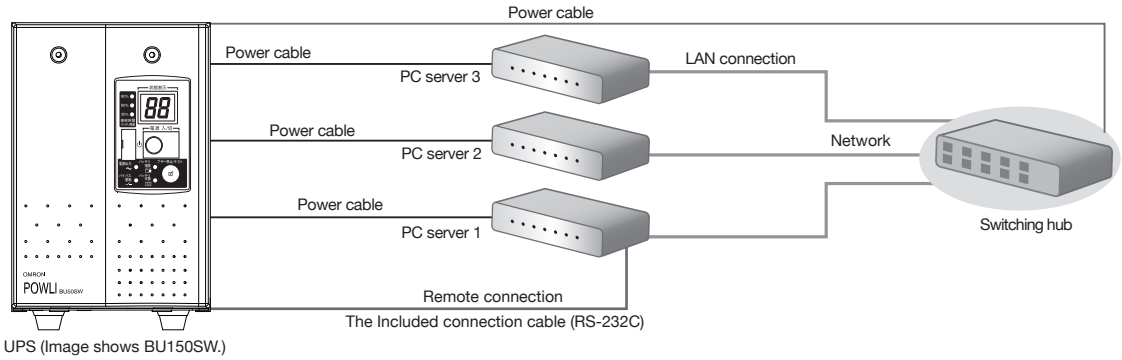

2. Install the included UPS monitoring software on the computer.

Software to install: PowerAct Pro
How to install: Refer to the sattached “Quick Installation Guide.”

Explanation

Scheduled operation using the UPS monitoring software

- When performing scheduled operation in which the UPS is stopped and a device such as a breaker is used to stop the UPS at the same time that commercial power stops, specify a period of no more than 3 months for the start of the next operation.
  If you specify a period longer than 3 months, the internal timer is reset and the scheduled operation does not start.
  Note that this period reduces to approximately half when the battery is dead.
  If a period of 3 months is exceeded, you start operation by supplying commercial power and pressing the Start Switch. However, if the battery is dead, you may not be able to start operation. In this case, replace the battery according to "6-2 Replacing the battery" on page 40.

Start of operation in scheduled operation using the UPS monitoring software

- To manually start up this unit after it has been stopped by a scheduled operation, turn OFF the power switch and turn it back ON again.
  To stop the unit when it is in operation, turn OFF the power switch.

Auto restart after OS closing processing using the UPS monitoring software

- When a power failure occurs, certain PCs (*1) automatically restart immediately after the OS is shut down by auto shutdown.
  In this case, the UPS stops during or after the restart of the PC, which may damage files and the hard disk. You can avoid this phenomenon by disabling POWER MANAGEMENT in the BIOS settings of the PC.

*1) Certain PC: It is known that this phenomenon occurs for MICRON's Millennia Mme.

7-2 When performing auto-save functions using the UPS service in Windows Server 2003/XP/2000 + UPS service driver

When using the included "UPS service driver", the OS standard UPS service in Windows Server 2003/XP/2000 can be used. When there is a power failure, files can automatically be saved and the computer can be shut down.

1. Connect the UPS to a computer.

Cable: Included connection cable (RS-232C)

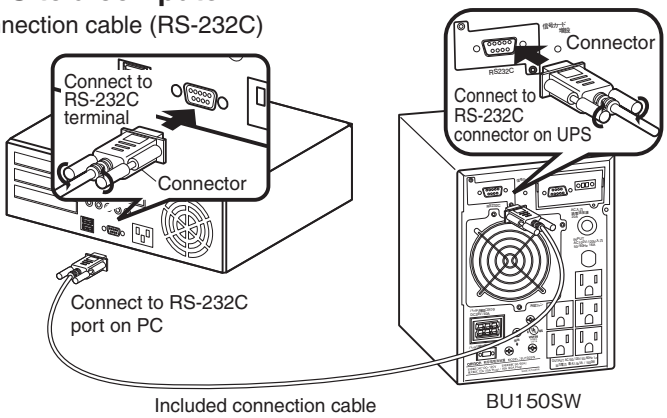

2. Install the included "UPS service driver" on the computer.

Software to install: “PowerAct Pro” or “Simple Shutdown Software”
* When connecting two or more computers to the UPS, install “PowerAct Pro”.

How to install: Refer to the attached “Quick Installation Guide.”
For “Simple Shutdown Software”, refer to the manual in the CD-ROM.

7-3 When performing auto-save functions using the standard UPS service in Windows Server 2003/XP/2000/NT

When using in combination with the BUC26 cable (sold separately), the OS standard UPS service in Windows Server 2003/XP/2000/NT can be used. When there is a power failure, the computer can be shut down.

1. Connect the UPS to a computer.

Cable: Connection cable (BUC26), sold separately

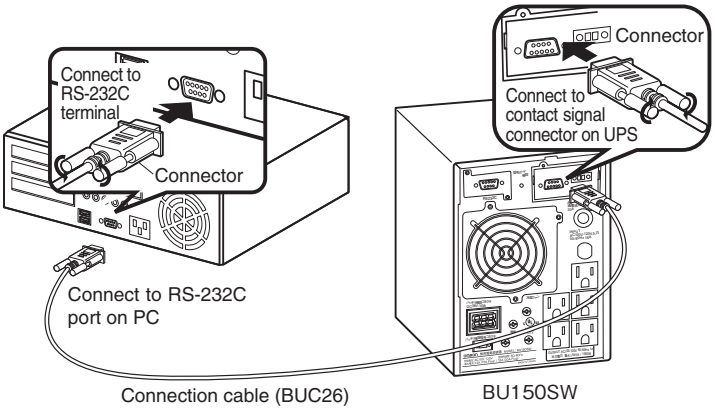

2. Perform UPS service setup.

You need to make Windows settings in order to perform auto shutdown. There is no need to install software.

<When using the Windows Server 2003/XP/2000 standard UPS service>

Start up the computer after connecting it with the UPS.
Perform "Log on to Windows" as the Administrator.
After logging on, follow the instructions below to set up the UPS service.

<When using the Windows Server 2003/XP/2000 standard UPS service>

Start up the computer after connecting it with the UPS.
Perform "Log on to Windows" as the Administrator.
After logging on, follow the instructions below to set up the UPS service.

7. Using the UPS monitoring software and contact signal

● How to set up UPS service (shut down Windows when low battery level is detected)

1) Double-click the "Power supply options" icon in "Control Panels".
2) Click the "UPS" tab in the "Power supply options" window.
   Click the "Select (S)" button.

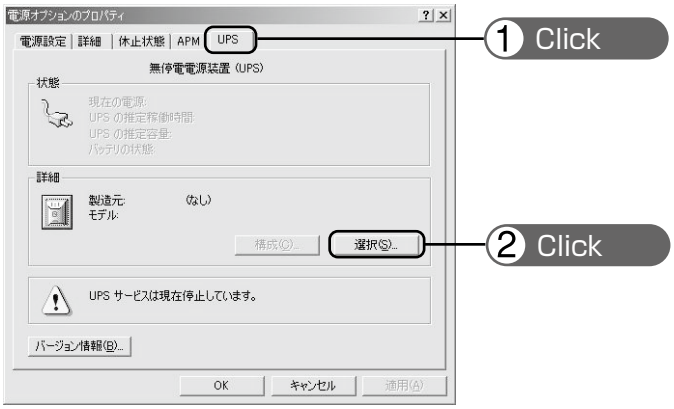

3) Click the button on the right of the "Select manufacturer (S)" window, and select "General" from the list.
   Click on "Custom" in the "Select model (M)" window.
   Click the button on the right of the "Port (P)" window, and select from the list the port that the UPS is connected to. (In the example screen below, the UPS is connected to COM1.)
   Click the "Next (N)" button.

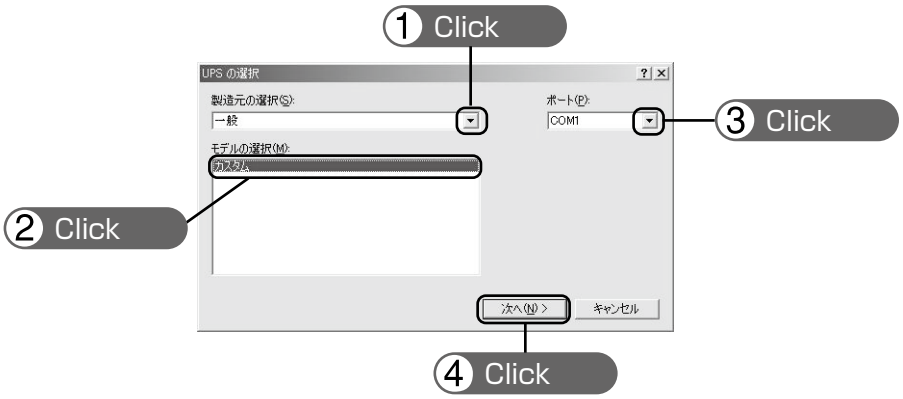

4) In the "UPS signal polarity" box, click on the boxes to the right of "Power supply failure/battery drive (P)" and "Low battery (L)" signals to insert check marks.
   Set the polarity for each signal to "Negative". Click the "End" button.

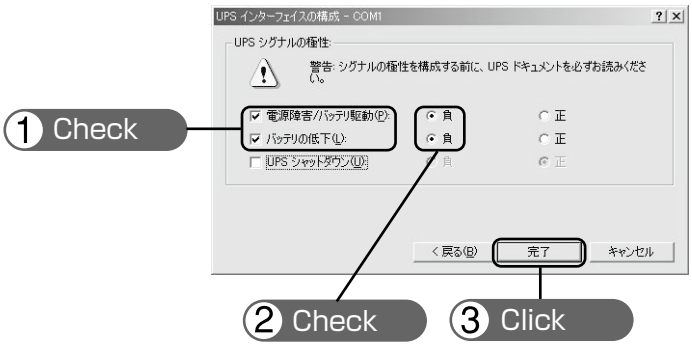

5) Click the "OK" button in the "Power supply options" window.
Setup is complete.

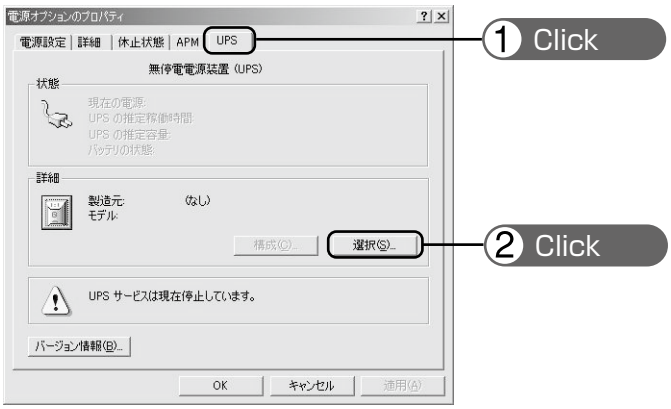

When a power failure occurs, Windows shutdown starts once the Low battery level signal is detected.

If the power is restored before the Low battery level signal is detected, Windows shutdown does not start and the normal monitoring state is restored.

Stopping the UPS

Recycling and Discarding the Battery

In the Windows Vista/Windows Server 2003/XP/2000 UPS service, there is no function to stop the UPS. After Windows is shut down, manually turn OFF the unit's power switch.

● **How to set up UPS service (set the time to shut down Windows)**

1) After performing the setup described in the previous section, click the "Configure (C)" button in the "Power supply options" window.

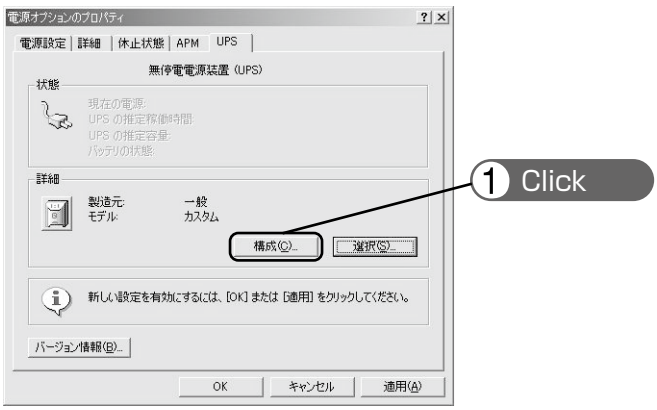

7

7. Using the UPS monitoring software and contact signal

2) In the "Warning" box, place a check mark in the box to the left of "Time from when battery drive starts until warning is issued (M)" by clicking on it.

   In the window to the right, set the amount of time to wait before starting Windows shutdown after a power failure occurs. (Setting range: 2 to 720 minutes)

   Click the "OK" button.

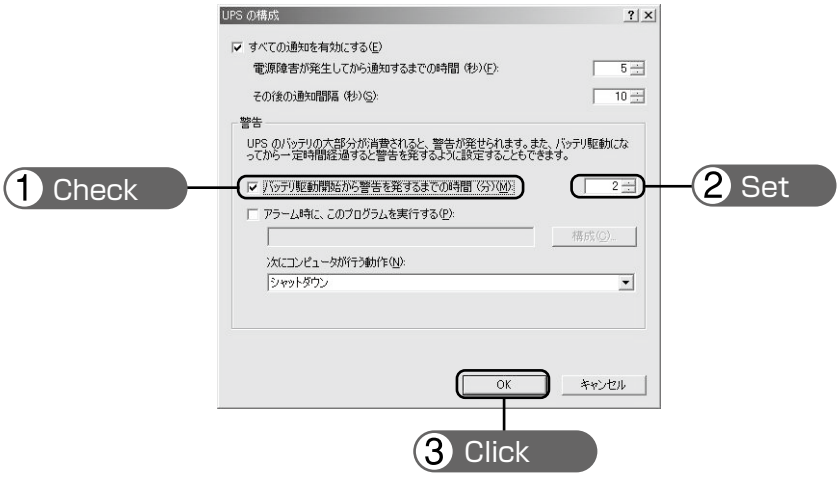

3) Click the "OK" button in the "Power supply options" window.
   Setup is complete.

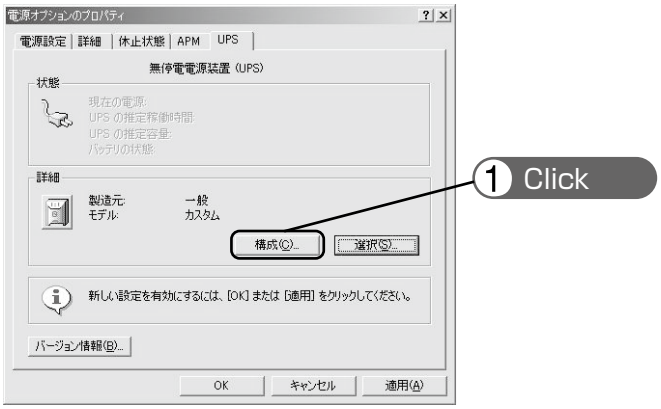

When a power failure occurs, Windows shutdown starts once the set time is exceeded or the low battery voltage signal is detected.

If the power is restored before the set time is exceeded, Windows shutdown does not start and the normal monitoring state is restored.

<When using the Windows NT standard UPS service>

● **How to set up UPS service**

1) Double-click the "UPS" icon in "Control Panels".
2) Insert a check mark in the checkbox to the right of "Port where UPS is installed (U)..." by clicking on it. In the setting field, select the number of the serial port (COM1 to 4) the unit is connected to.
3) To shut down Windows when a low battery is detected, click on the checkboxes to the left of "Power failure signal (P)" , "Low battery level signal (L)" and "Remote uninterruptible power source shutdown signal (R)" to insert check marks.

<Setting to detect low battery singal and shut down Windows>

Set each signal interface voltage setting as shown below.

- Power failure signal (P) ... Negative
- Low battery signal (L) ... Negative
- Remote uninterruptible power source shutdown ... Positive

4) To set the time to shut down Windows, click on the checkboxes to the left of “Power failure signal (P)” and “Remote uninterruptible power source shutdown signal (R)” to insert check marks.

<Setting to detect low battery singal and shut down Windows after the set delay period>

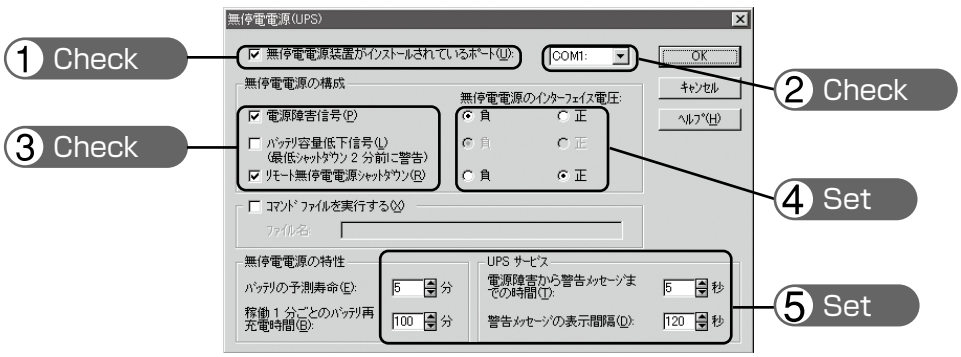

Set each signal interface voltage setting as shown below.

- Power failure signal (P) ... Negative
- Remote uninterruptible power source shutdown ... Positive

Set the attributes for the uninterruptible power source and the time for each UPS service item.

Note

Please note that in the case of incorrect interface voltage signal settings, Windows NT will not receive the signal from the UPS and the UPS will not stop when there is a power failure.

Failure to put check marks in the boxes will lead to the same result.

5) After the settings are made, double-click the "Service" icon in "Control Panels".
6) Select the UPS service and click the "Start" button.

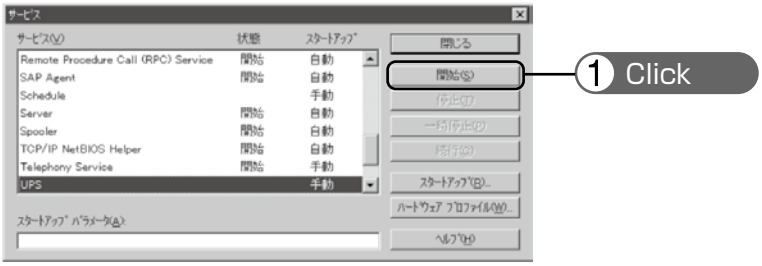

By starting the alerter service, messenger service, and event log service in advance, the UPS service sends warning messages to the user and records a history of events such as power failures when they occur.

When a power failure occurs, Windows shutdown is performed once the Low battery level signal is detected. If the power is restored before the Low battery level signal is detected, Windows shutdown is not performed and the normal monitoring state is restored.

7-4 Contact signal

Contact Signal

You can develop your unique system based on the following specifications to automate the process at a power failure. You can perform power-failure processing by allowing the system to detect the backup signal and also perform system shutdown processing by allowing the system to detect the battery low signal. Also, by inputting the backup stop signal from the system, you can stop the UPS with a sufficient battery level to prepare for the next occurrence of a power failure.

1. Signal output

The UPS has 4 kinds of output signals. The output circuit consists of an open collector circuit using a photo coupler (a kind of electronic switch).

- **Backup Signal output: BU**
  BU stays ON during a power failure.

BU-COM	ON when a power failure occurs

- **Battery Low Signal output: BL**
  Goes ON when the battery becomes weak during the Battery Mode.

BL-COM	ON when the battery is low

- **Trouble Signal output: TR**
  Goes ON when an internal failure of the UPS occurs.

TR-COM	ON when a power failure occurs

- **Battery Replacement Signal output (WB)**
  Goes ON when the battery needs to be replaced due to deterioration.

WB-COM	ON when battery deterioration is detected

2. Input of the UPS Stop Signal (BS)

BS-COM	UPS stops

Stops the output of the UPS after the time period specified by the “power output stop delay time setting” (setting switches 5 and 6) has elapsed.

(1) When the "UPS Stop Signal setting" (setting switch 7) is set to OFF:

You can stop the output of the UPS by inputting the voltage signal (HIGH) that lasts at least 10 seconds from the outside.

(2) When the "UPS Stop Signal setting" (setting switch 7) is set to ON:

You can stop power output by inputting the voltage signal (HIGH) that lasts at least 0.01 second (10 ms) from the outside that is accepted only during backup.

See also "4-4 Changing the setting of the functions" ➛ Page 31

3. Remote ON/OFF Signal

Remote ON/OFF signals can be used to start and stop the UPS, by using either an externally connected contact or the ON/OFF status of the open collector circuit. To use this function, turn on the Power Switch of the UPS.
Connection terminals are at contact signal connector pins 6-7 and the remote ON/OFF connector. Use whichever one best suits the application.

External contact	Operate
Open	Start
Close	Stop

4. Items that can be set using the contact signal card

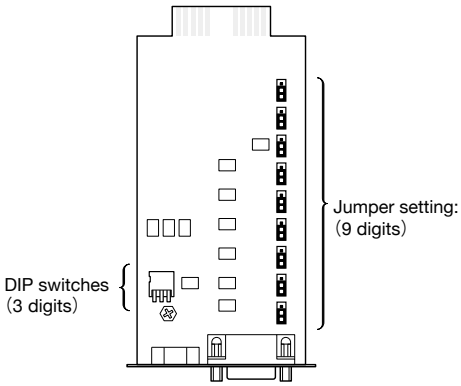

■ Setting the switches

After changing the setting switch, follow the procedure described below.
After changing the setting switch, disconnect the AC input plug, wait until the status indicator is completely OFF, and then reinsert the AC input plug and turn the power switch ON .

By using the switches of contact signal card, set the item below.

● **Output delay time setting for backup signal output (BU)**

Continues during a power failure, and turns ON (OFF). By setting the contact signal card's setting switch as shown in the table on the right, the length of time from when the power failure occurs until the power failure signal is output can be delayed between 0 and 3 minutes.

The power failure signal is not output if the power supply error is resolved within the set delay time.

BL-COM	ON when the battery is low

Setting switch 1	Setting switch 2	Delay time setting
OFF	OFF	0 second (factory setting)
ON	OFF	Signal output after 30 seconds
OFF	ON	Signal output after 60 seconds
ON	ON	Signal output after 180 seconds

● **BU/BL signal reverse output setting**

BU and BL signals are output in reverse.

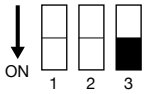

Setting switch 3	Backup signal output (BU)
OFF	Normal output (factory setting)
ON	Reverse output

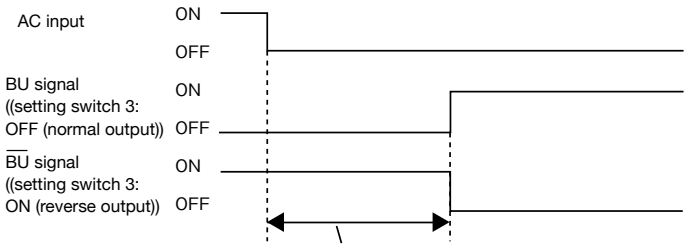

Backup signal output (BU) delay time setting (setting switches 1, 2)

■Jumper settings

By making jumper settings, the contact signal card SC05 and SC06 connector pin assignments can be changed.

Turn over the contact signal card, and change the contact sugnal card's JP2 to JP9 jumper settings (8 settings) to "SC05/06".

* Use the [SC05/06/07] side for JP10.

* Factory settings
JP2 to JP9: SC07 side
JP10: SC05/06/07 side

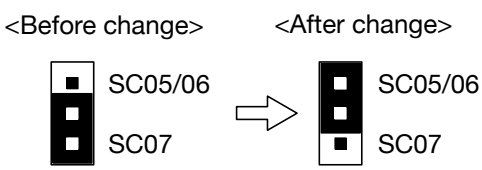

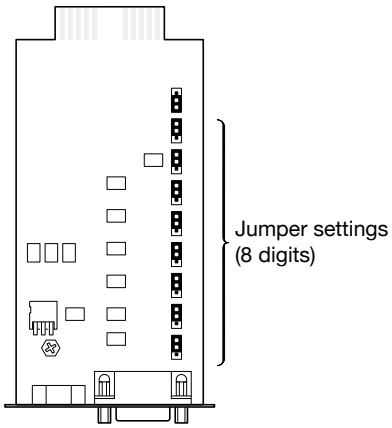

How to insert/remove the contact signal card

(1) Turn OFF the power switch, remove the top and bottom screws (2 screws) of the contact signal connector on the back of the unit, and carefully remove the contact signal card.

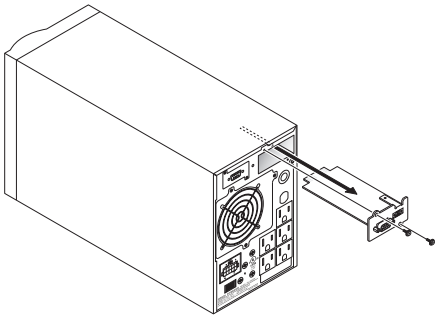

(2) After changing the settings, carefully reinsert the contact signal card and securely tighten the 2 screws.

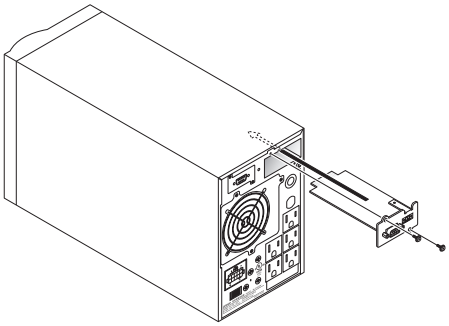

5. Contact Signal Connector (female DSUB9P)

Pin assignment	Pin number	For jumper setting “SC07” * Factory settings	For jumper setting “SC05/06”
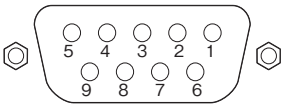 Front view Screw size: inch screw #4-40 UNC	1	Battery LOW signal output (BL)	NC
	2	Trouble signal output (TR)	Backup signal output (BU)
	3	Backup stop signal input (BS)	Backup reverse signal output ($\overline{BU}$)
	4	NC	COMMON (COM)
	5	COMMON (COM)	Battery Low Signal output (BL)
	6	Remote ON/OFF input (–)	Backup stop signal input (BS)
	7	Remote ON/OFF input (+)	Remote ON/OFF input (–)
	8	Backup signal output (BU)	Trouble Signal output (TR)
	9	Deteriorated battery signal output (WB)	Remote ON/OFF input (+)

6. Remote ON/OFF connector

Pin assignment	Pin number	Signal name
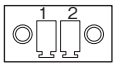 Front view Screw size: Inch screw #4-40 UNC	1	Remote ON/OFF (+)
	2	Remote ON/OFF (-)

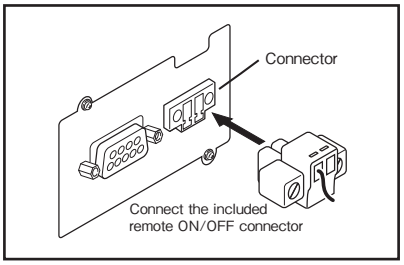

7. Contact Signal ratings

● Signal output (BL, TR, BU, WB, $\overline{BU}$)

Photo coupler ratings

Appliable voltage: 35 VDC or less

Maximum current: 20 mA

● Remote ON/OFF

Voltage between terminals: 5 VDC

Current when closed: max.10 mA

● UPS Stop Signal input (BS)

Input voltage	HIGH(ON)	5 to 12 VDC
	LOW(OFF)	0.7 VDC or less

8. Contact Signal circuit inside the UPS

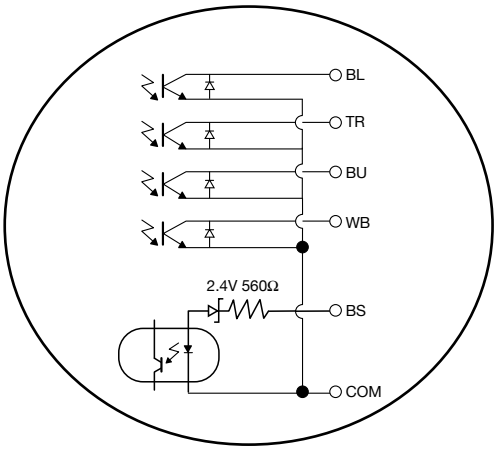

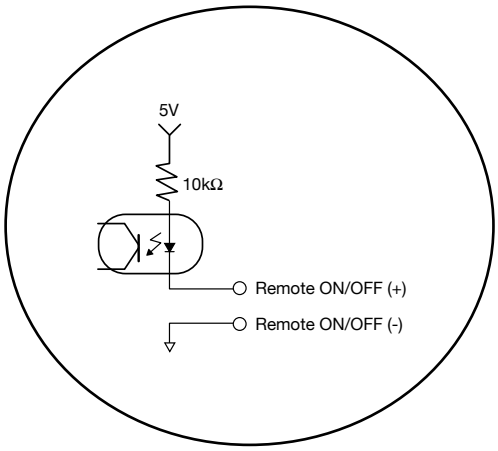

9. Example of the use of the Contact Signal circuit

● **Example of BU signal output circuit and the connected circuit**

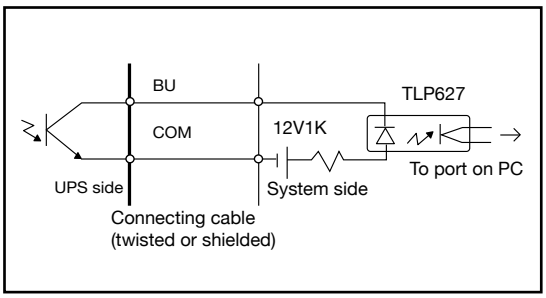

● **Example of BS signal input circuit and the connected circuit**

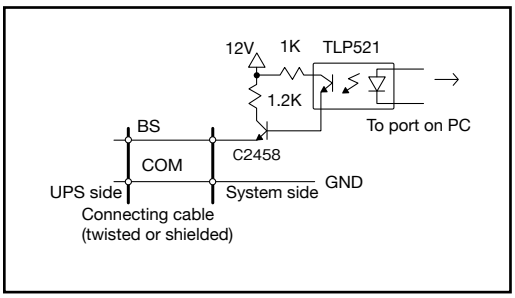

● **Remote ON/OFF circuit**

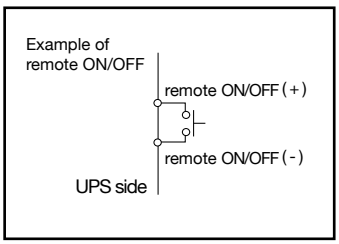

10. Precautions and notes for the use of the Contact Signal

Notes

- When connecting a device such as a relay that generates counter electromotive force to the signal output circuit, connect diodes that prevent counter electromotive force to both ends of the relay.

Explanation

- When power is restored after the unit stopped automatically during a power failure, the unit automatically restarts and supplies power. If you do not want to start the connected devices, turn OFF their switches or set the auto restart setting (setting switch 2) to ON. (See page 32.)

11. Xserve RAID connection procedure

Apple's Xserve RAID can be controlled by changing the unit's contact signal card settings.
* Cable: Connection cable (BUC28), sold separately

1. UPS connection procedure

(1) Turn OFF the unit's power switch and remove the contact signal card from the rear of the unit.
See also "How to insert/remove the contact signal card"

(2) Change the contact signal card's JP2 to JP9 jumper settings (8 settings) to "SC05/06."
(3) Change the JP10 jumper setting to "SC05XSR."
(4) Insert the contact signal card into the UPS.
(5) Connect the BUC28 cable connector (female end) to the Xserve RAID serial port and turn the connector fixing screw clockwise to tighten it.
Connect the other end (male end) of the same cable to the contact signal card and turn the connector fixing screw clockwise to tighten it.

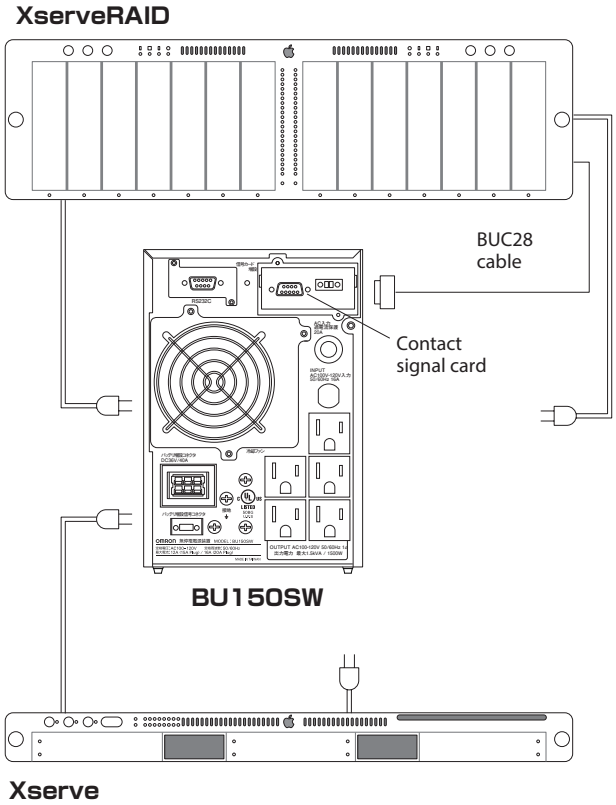

(6) Turn ON the power switches for the Xserve RAID and the UPS.

2. Procedure for changing settings so that Xserve RAID performs auto startup when UPS starts up

(1) Open RAID Admin.

(2) Select the target Xserve RAID and log in to it.

(3) After login is complete, the Settings button on the RAID Admin screen is enabled. Click this button to open the Settings screen. (A RAID Admin administrator password is required when changing the settings. Enter the password when prompted.)

(4) After the Settings screen opens, click the System tab and find the Options section. In the Options section, place a check mark in the check box next to “Auto restart after power failure.”

(5) Click the OK button when finished.

3. Checking operation

(1) Remove the UPS AC input plug from the wall outlet (commercial power) to put it into Battery Mode.

(2) When in Battery Mode, the UPS outputs the power outage signal. When the Xserve RAID receives the power outage signal, the write cache is closed.

(The write cache section on the operating system’s RAID Admin data screen displays “Not in use.”)

(3) Power to the Xserve RAID can be turned OFF.

(4) After checking the operation, connect the UPS AC input plug to the wall outlet (commercial power).

8 Using an SNMP/Web card

8-1 Adding an SNMP/Web card

An SNMP/Web card can be loaded into the card slot on the back of the unit. Remove the contact signal card that the unit came equipped with, and plug the SNMP/Web card in its place. Store the removed contact signal card in a safe place.

- SNMP/Web card (model number: SC20G), sold separately

(1) Remove the 2 screws, and carefully pull out the contact signal card.

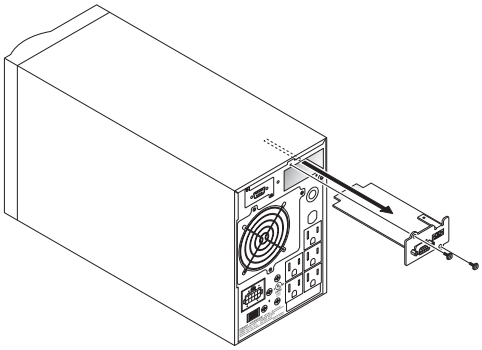

(2) Carefully insert the SNMP/Web card (model number: SC20G), and securely tighten the 2 screws.
* Replace with BU50SW/BU75SW/BU100SW/BU150SW brackets.

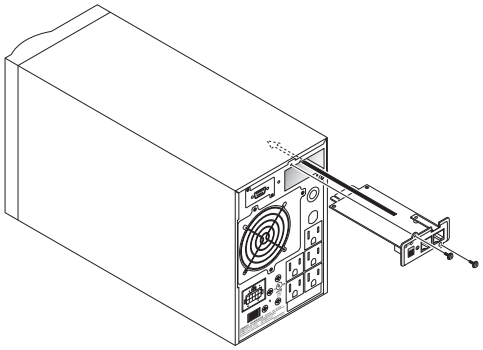

8-2 SNMP/Web card outline

■ Description (features)

- Direct connection between UPS and network
  Inserting an SNMP/Web card (SC20G) into the UPS enables a LAN connection, allowing the UPS to be controlled via computers with no serial port.
- Remote UPS management
  Using a commercially available SNMP manager or web browser, you can control the UPS via a computer connected to the network.
- Possible to make function settings for the UPS and SNMP/Web card via a computer on the network
  UPS and SNMP/Web card (SC20G) parameter settings can be made via any SNMP management station or internet browser. (Functions that act as an SNMP agent can make settings via Telnet and serial connection.)
- Enhanced security functions
  Compatible with HTTPS, SNMP v3 as well as HTTP, SNMP v1.
  Note: HTTPS can be accessed using Open SSL ver.2.0.
  Some browsers such as Firefox cannot access HTTPS.
- Coordinated shutdown
  Multiple UPS can coordinate with each other to perform shutdown.
- Log function
  * The UPS power status, battery status, etc. can be stored in the built-in flash memory.
  * Compatible with SYSLOG.
- Auto shutdown function
  Shutdown is automatically performed when there is a power supply error or when a shutdown has been scheduled. Scheduled operations (auto startup and auto shutdown) can be performed over the network.
- Equipped with UPS standard MIB (RFC1628) and proprietary MIB (swc mib)
- Using JAVA applet to monitor the power supply status
  The power supply status can be visually checked on a graph display.
- Supports virtual software
  Possible to safely shutdown multiple IT devices on a virtualized environment such as Windows Server2008 “Hyper-V”, and VMware ESX/ESXi.
- Script shutdown function
  Possible to easily shutdown an appliance server that does not allow you to install the shutdown software.
- Alive monitoring function
  Using Ping and Syslog, operation status of network devices can be monitored.
- Syslog mail alert function
  When a trouble occurs, email notification is delivered to the network administrator for a speedy response.
- Compatible with Windows Mobile phones/iPhone
  Easy power management on the network using Windows Mobile phones/iPhone.
- CO2 monitoring function
  Possible to monitor CO2 emitted from the information devices connected to the UPS.

■ Specifications

LAN port	10/100 Mbit
Network protocol	SNMP, HTTP, APR, RARP, TFTP, ICMP
Other communication route	Serial connection: asynchronous method (setting only)
Number of controllable computers	32 max. (including slave UPS when coordinated shutdown is enabled)
Support MIB	UPSMIB (RFC1628) OMRON MIB
Other	Equipped with real-time lock
Shutdown software-compatible OS	**PowerAct Pro Ver4 (Slave Agent)** Windows Server 2008/Windows Vista/Windows Server 2003/Windows XP/ Windows 2000 Redhat Enterprise Linux Ver.5/Asianux Server 3 Mac OS X v10.5/X server v10.5 Solaris 10 Windows Server2008 “Hyper-V” VMware ESX 3.5 VMware ESXi 3.5 **Shutdown Agent** Windows Server 2003/Windows XP/Windows 2000/Windows NT4.0 Kernel 2.x (RedhatLinux7.2/7.3/8.0, RedhatLinuxAdvancedServer2.1, etc.) Mac OS X v10.5/X server v10.5/Mac OS X v10.4*1/X server v10.4*1/Mac OS X v10.3*2/X server v10.3*2

*1 Compatible with Macintosh computers equipped with PowerPC or Intel CPU.
*2 Compatible only with Macintosh computers equipped with PowerPC.

For more details, refer to the instruction manual included with the SNMP/Web card.
The most recent firmware can be downloaded from our homepage(https://www.oss.omron.co.jp/).

9 Extending the backup time

9-1 Connecting an additional battery unit (BU100SW/ BU150SW only)

You can extend the backup time by connecting an additional optional battery unit to the UPS.

You can connect only one additional battery unit.

UPS	Additional battery unit
BU100SW	BUM100S
BU150SW	BUM150S

The explanation below is for connecting a BUM100S (for adding to BU100SW).
Use these instructions when adding a BUM150S to a BU150SW.
Some of the specifications are different.

When an additional battery unit is connected, the charging time is 24 hours.

For the BUM100S, the included battery connection cable is provided with cable clamps attached. Connect the battery connection cable according to the instructions below. Cable clamps are not provided with the BUM150S.

(1) Loosen the screws and remove the battery connector covers on the rear side of the unit and battery unit. Use the removed screws to attach the cable clamps.

(2) Connect the battery connection cable to the battery connectors on the rear side of the unit and the battery unit. To simplify the operation, do not yet tighten the screws that hold the battery connection cable on the cable clamp.

(3) Use screws to attach the cable clamps to the rear side of the unit and the battery unit (2 screws each).

(4) Tighten the screws that hold the battery connection cable on the cable clamps.

(5) Turn ON the overcurrent protection switch on the back of the battery unit.

(6) Connect the AC input plug of the unit to a wall outlet. The additional battery lamp on the unit's operation panel turns ON.

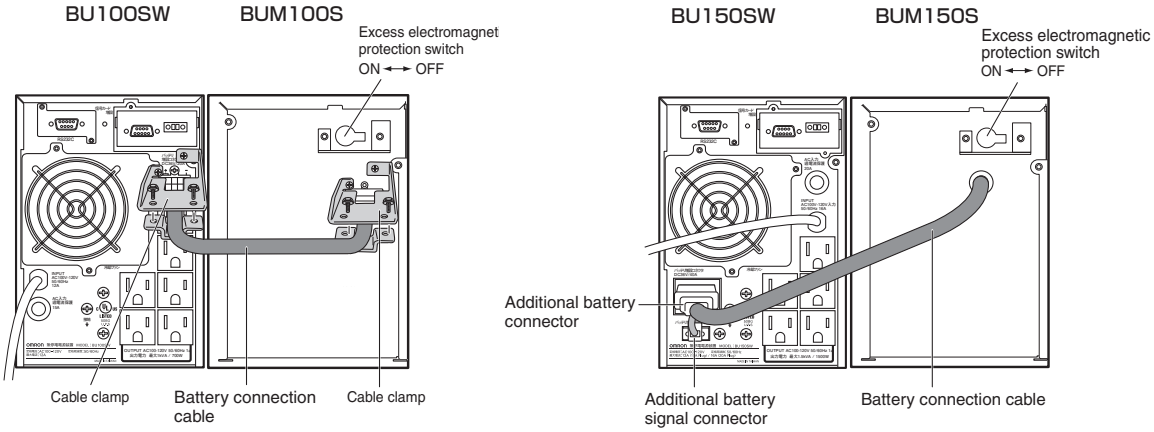

See also See also For information on backup time, see the backup time table in ”5-2 Estimated backup time”. ➛ Page 37

10 Troubleshooting

Perform the checks shown below if the unit is operating abnormally.
If the unit continues to operate abnormally, please contact our Electronic System & Eqiuipment customer support center at _____.

Problem	Check and remedy
UPS does not operate. The LED display does not light up, even though the AC input plug is connected to a wall outlet (commercial power) and the power switch is ON.	1. Check that the AC Input Plug is connected to the commercial power securely. 2. The AC Input Overcurrent Protection is working. (If the black button has popped up, there are probably too many connected devices or there is a short in the connected devices.) Disconnect all of the connected devices, push in the the black AC input overcurrent protection button and turn ON the Power Switch of the UPS again. If the status indicator does not display normally, there is a problem with the UPS. (See "Interpreting beeps and displays" on page 26.)
Backup is not possible. The computer stops when a power failure occurs.	Is charging insufficient? Perform the test after charging the battery for at least 8 hours. (You can charge the battery by connecting the AC input plug of the UPS to a wall outlet (commercial power).)
Backup is performed too frequently. Frequent switching is performed although a power failure does not occur. You hear the sound of switching.	Variations (decrease) in the input power occur frequently. Or, noise is included that significantly distorts the voltage waveform of the input power. ●Change the wall outlet (commercial power) to which you connect the UPS. Try connecting to a wall outlet (commercial power) away from equipment that consumes large power. ●This problem may occur also when you connect many devices to a plug strip or extension cord connected to the UPS if it is a long or thin cable.
The display is abnormal. ● The display is unstable. ● White lines occur. ● Noise increases.	The probable cause is noise that occurs inside the UPS. ●Ground all devices connected to the UPS. Connect them to a wall outlet (commercial power) for 3-pin plugs or connect their Grounding Terminal to the Grounding Terminal of a wall outlet. ●This problem may occur when power cords are long or placed closely or when the UPS and devices to be backed up are placed closely. Rearrange them. ●If the UPS or devices connected to the UPS are contained in a metal rack, attempt to ground the rack itself.
The battery replacement lamp blinks and the beeper sounds at 2-second intervals.	The auto battery test or self-diagnostic test determined that the battery is dead. Battery Mode cannot be performed, so the battery pack needs to be replaced.
The status indicator shows "OL", and the beeper sounds at 0.5-second intervals.	There are too many connected devices. Reduce the number of connected devices until "On" is displayed on the status indicator.
The status indicator blinks "EO", and the beeper sounds continuously.	Output stopped due to exceeded connection capacity. Turn OFF all power to the unit and connected devices, and reduce the number of connected devices. Then, turn the power to the unit and connected devices back ON and check whether "On" is displayed on the status indicator.

Reference

A. Specifications

		BU50SW	BU75SW	BU100SW	BU150SW
Method	Operation method	Full-time inverter supply method			
	Connectable devices	PC, display, and peripherals			
Input	Nominal Input voltage	100 ~ 120V AC ±10%			
	Input voltage range	75±4 to 144±4V AC (with 90% or less connection load) 85±4 to 144±4V AC (with 90% or less connection load)			
	Input frequency	50/60Hz ± 4Hz			
	Maximum current	8A	10A	12A	16A
	Phase	Single-phase, two-wire			
	Input plug shape	3P (NEMA 5-15P)			3P (NEMA 5-15P/L5-20P)
	Input protection	Reset-type overcurrent protection device			
	Input protection capacity	10A	10A	15A	20A
Output	Output capacity (shared maximum) *1	500VA/350W	750VA/500W	1000VA/700W	1500VA/1050W
	Output voltage *2	100V mode 100V AC ±3% 110V mode 110V AC ±3% 115V mode 115V AC ±3% 120V mode 120V AC ±3%			
	Peak voltage value (In Commercial Power Mode)	100V mode: 141V AC ±6% 110V mode: 156V AC ±6% 115V mode: 163V AC ±6% 120V mode: 170V AC ±6%			
	Peak voltage value (In Battery Mode)	100V mode: 141V AC +6/-6% 110V mode: 156V AC+6/-9% 115V mode: 163V AC +6/-13% 120V mode: 170V AC +6/-17%			
	Output frequency	50/60Hz±1%			
	Phase	Single-phase, two-wire			
	Output waveform (In Commercial Power Mode/ Batttery Mode)	Sine wave / Shine wave			
	Waveform distortion rate	100V mode: 6% max. 110V mode: 9% max.			
	(Rectified load, at rated output)	115V mode: 13% max. 120V mode: 17% max.			
	Output receptacle	NEMA 5-15R			
	Number of output receptacles	Backup: 6			Backup: 5
	Power failure switching time	Uninterrupted			
	Commercial direct shipment (switching time)	4 msec. max.			
	Backup time *3	Minimum 8 minutes	Minimum 5 minutes	Minimum 5 minutes	Minimum 4 minutes
Battery	Type	Compact sealed lead battery			
	Sealed lead battery life expectancy	4 to 5 years (long operating life) *At ambient temperature of 20°C			
	Battery capacity (V/Ah) (x Quantity)	12V DC/ 7.2 Ah (x 2)		12V DC/ 7.2 Ah (x 3)	12V DC/ 8 Ah (x 3)
	Charging time	8 hours		8 hours *4	
Environment	Operating ambient temperature	0 to 40°C (during operation)/ -15 to 50°C (during storage)			
	Operating ambient humidity	25 to 85%RH (during use)/10 to 90%RH (during storage)			
Dimensions (WxDxHmm)		145 x 395 x 224 *5			145 x 480 x 224 *5
Weight of unit		Approx. 13 kg	Approx. 13 kg	Approx. 15.5 kg	Approx. 16.5 kg
Internal power consumption (max.)		45W (65W max.)		50W (70W max.)	55W (80W max.)
Noise regulation (compliance standard)		VCCI Class A			
Safety standard compliance		UL1778			
Noise		50 dB max.			

*1: Make sure that both the VA value and the W value of the load capacity connected to the UPS are within the range specified here.
*2: Check the operation beforehand if the unit is used in any mode other than “100V AC mode”. In some cases, the maximum voltage of output in Battery Mode may be lower than the maximum voltage in usual operation (commercial power supply).
*3: The backup times shown here are for when rated load is connected, at 20°C, and for initial characteristics.
*4: When an additional battery unit is connected, the charging time is 24 hours.
*5: The height includes the 13-mm height of the rubber feet.

		BU50SW	BU75SW	BU100SW	BU150SW
Méthode	Méthode de fonctionnement	Méthode d'alimentation de l'onduleur sans coupure			
	Équipements branchables	PC, écran et périphériques			
Entrée	Tension d'entrée nominale	100 ~ 120V AC ±10%			
	Gamme de tension d'entrée	75 ± 4 à 144 ± 4V AC (avec 90% ou moins de charge de connexion) 85 ± 4 à 144 ± 4V AC (avec 90% ou moins de charge de connexion)			
	Fréquence d'entrée	50/60Hz ± 4Hz			
	Courant maximum	8A	10A	12A	16A
	Phase	Deux fils monophasés			
	Forme de la fiche d'entrée	3P (NEMA 5-15P)			3P (NEMA 5-15P/L5-20P)
	Protection d'entrée	Dispositif de protection contre les surtensions de type réinitialisation			
	Résistance de la protectiond'entrée	10A	10A	15A	20A
Sortie	Puissance de sortie (maximum partagé) * 1	500VA/350W	750VA/500W	1000VA/700W	1500VA/1050W
	Tension de sortie * 2	Mode 100V 100V AC ± 3% Mode 110V 110V AC ± 3% Mode 115V 115V AC ± 3% Mode 120V 120V AC ± 3%			
	Valeur de crête de la tension (en Mode alimentation secteur)	Mode 100V : 141V AC ±6% Mode 110V : 156V AC ±6% Mode 115V : 163V AC +6% Mode 120V : 170V AC ± 6%			
	Valeur de crête de la tension (en Mode batterie)	Mode 100V : 141V AC +6/-6% Mode 110V : 156V AC+6/-9% Mode 115V : 163V AC +6/-13% Mode 120V : 170V AC +6/-17%			
	Deux fils monophasés	50/60Hz±1%			
	Phase	Deux fils monophasés			
	Forme d'onde de sortie (en Mode alimentation secteur / Mode batterie)	Onde sinusoïdale / Onde sinusoïdale			
	Taux de distorsion de l'onde	Mode 100V : 6% max. Mode 110V : 9% max.			
	(Charge redressée, à la puissance nominale)	Mode 115V : 13% max. Mode 120V : 17% max.			
	Prise de sortie	NEMA 5-15R			
	Nombre de prises de sortie	Autonomie : 6			Autonomie : 5
	Temps de commutation lors d'une panne de courant	Ininterrompu			
	Fourniture secteur directe (temps de commutation)	4 ms. max.			
	Temps d'autonomie * 3	Minimum 8 minutes	Minimum 5 minutes	Minimum 5 minutes	Minimum 4 minutes
Batterie	Type	Batterie compacte scellée au plomb			
	Durée de vie de la batterie scellée au plomb	4 à 5 ans (longue durée de vie) * À une température ambiante de 20°C			
	Capacité de la batterie (V / Ah) (x Quantité)	12V DC/ 7,2 Ah (x 2)		12V DC/ 7,2 Ah (x 3)	12V DC/ 8 Ah (x 3)
Environment	Temps de charge	8 heures		8 heures * 4	
	Température ambiante de fonctionnement	0 à 40°C (pendant le fonctionnement) / -15 à 50°C (pendant le stockage)			
	Humidité ambiante lors du fonctionnement	25 à 85 % HR (en cours d'utilisation) / 10 à 90% HR (pendant le stockage)			
Dimensions (L x H x Pmm)		145 x 395 x 224 *5			145 x 480 x 224 *5
Poids de l'appareil		Env. 13 kg	Env. 13 kg	Env. 15,5 kg	Env. 16,5 kg
Consommation interne (max.)		45W (65W max.)		50W (70W max.)	55W (80W max.)
Réglementation sur les nuisances sonores (norme de conformité)		VCCI Classe A			
Conforme aux normes de sécurité		Conformité avec UL1778			
Bruit		50 dB max.			

*1: S'assurer que les valeurs VA et W de la capacité de charge reliée à l'ASC sont dans la plage indiquée ici.
*2: Tester à l'avance le fonctionnement si l'appareil est utilisé dans un autre mode que "mode 100V AC". Dans certains cas, la tension maximale de sortie en Mode batterie peut être inférieure à la tension maximale lors du fonctionnement habituel (alimentation secteur).
*3: Les durées d'autonomie indiquées ici sont lorsque la charge nominale est branchée, à 20°C, et pour les caractéristiques initiales.
*4: Lorsqu'une unité de batterie supplémentaire est connectée, le temps de charge est de 24 heures.
*5: La hauteur inclut la hauteur de 13mm des pieds en caoutchouc.

B. Dimensions

● **BU50SW/BU75SW /BU100SW**

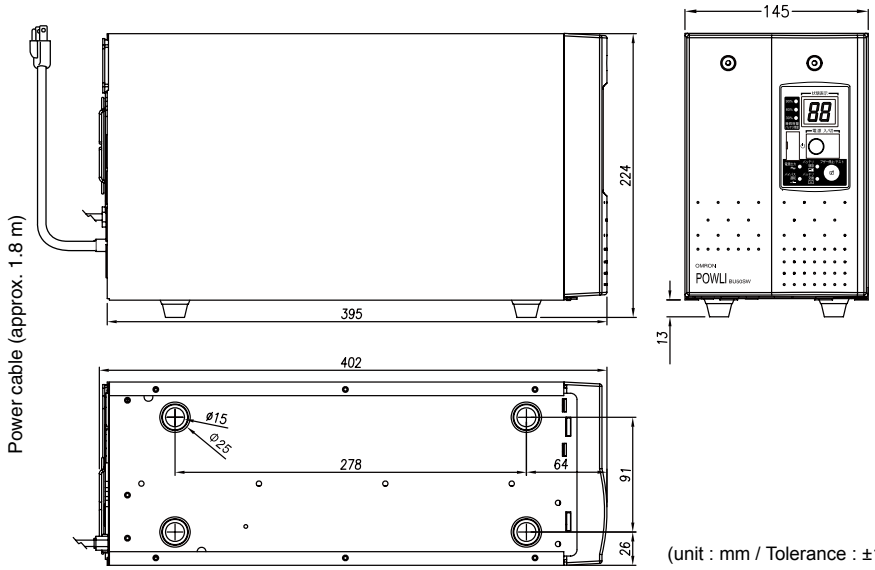

(unit : mm / Tolerance : ±1mm)

● **BU150SW**

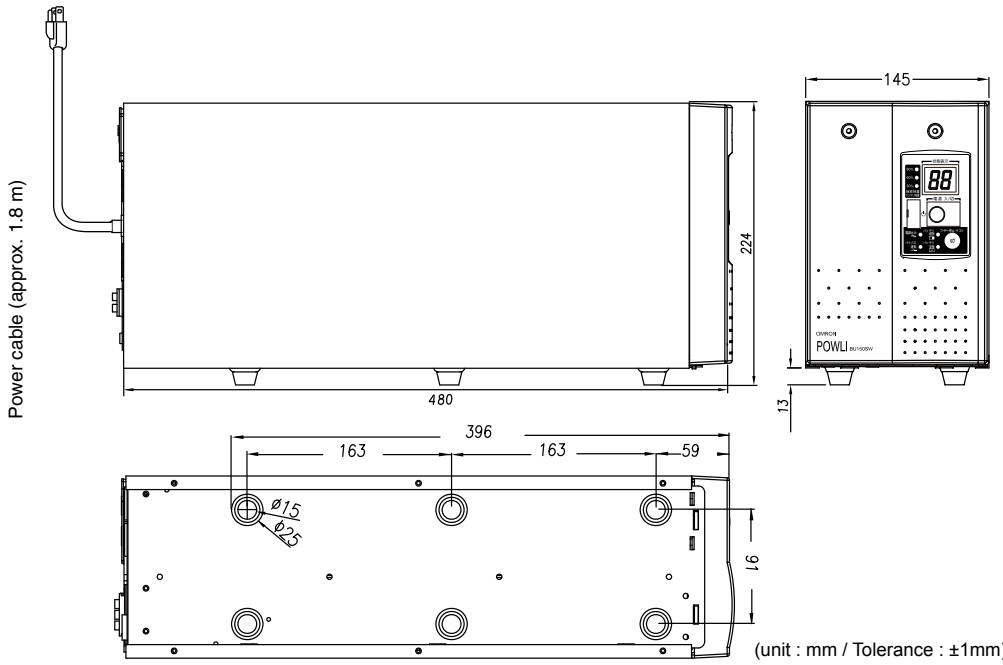

(unit : mm / Tolerance : ±1mm)

C. Circuit block diagram

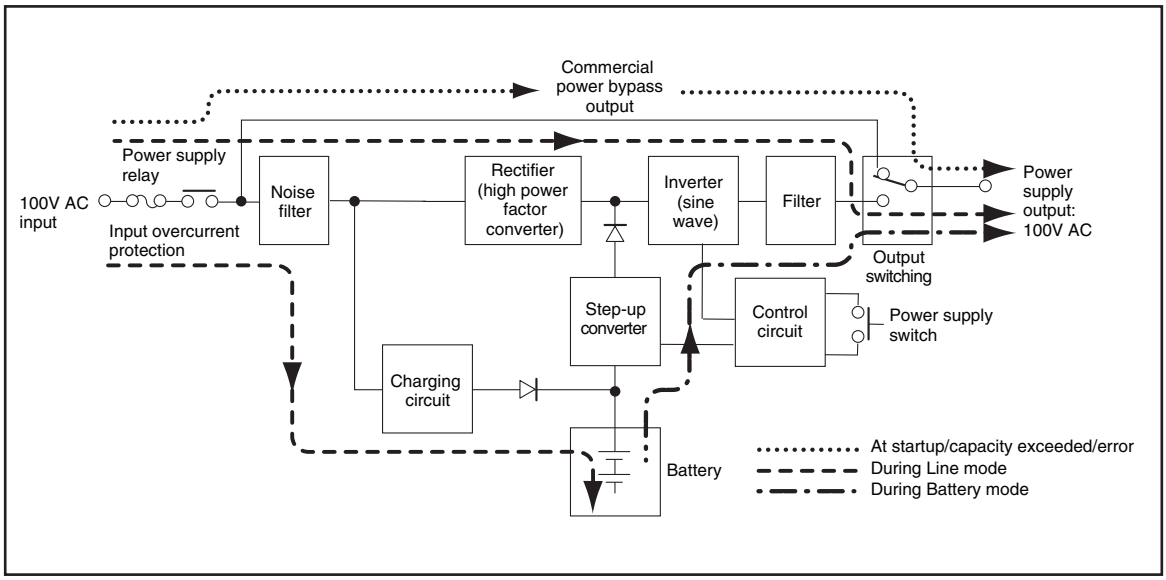

D. Related products

Description	Model
Replacement battery pack for BU50SW/BU75SW	BP70XS
Replacement battery pack for BU100SW	BP100XS
Replacement battery pack for BU150SW	BP150XS
Additional battery unit for BU100SW	BUM100S
Additional battery unit for BU150SW	BUM150S
Replacement fan for BU50SW/BU75SW	BUF75S
Replacement fan for BU100SW/BU150SW	BUF100S
SNMP/Web cardBUF100S	SC20G
Connection cable for Windows UPS service	BUC26
Apple Xserve RAID connection cable	BUC28
Mounting bracket	BUP100S

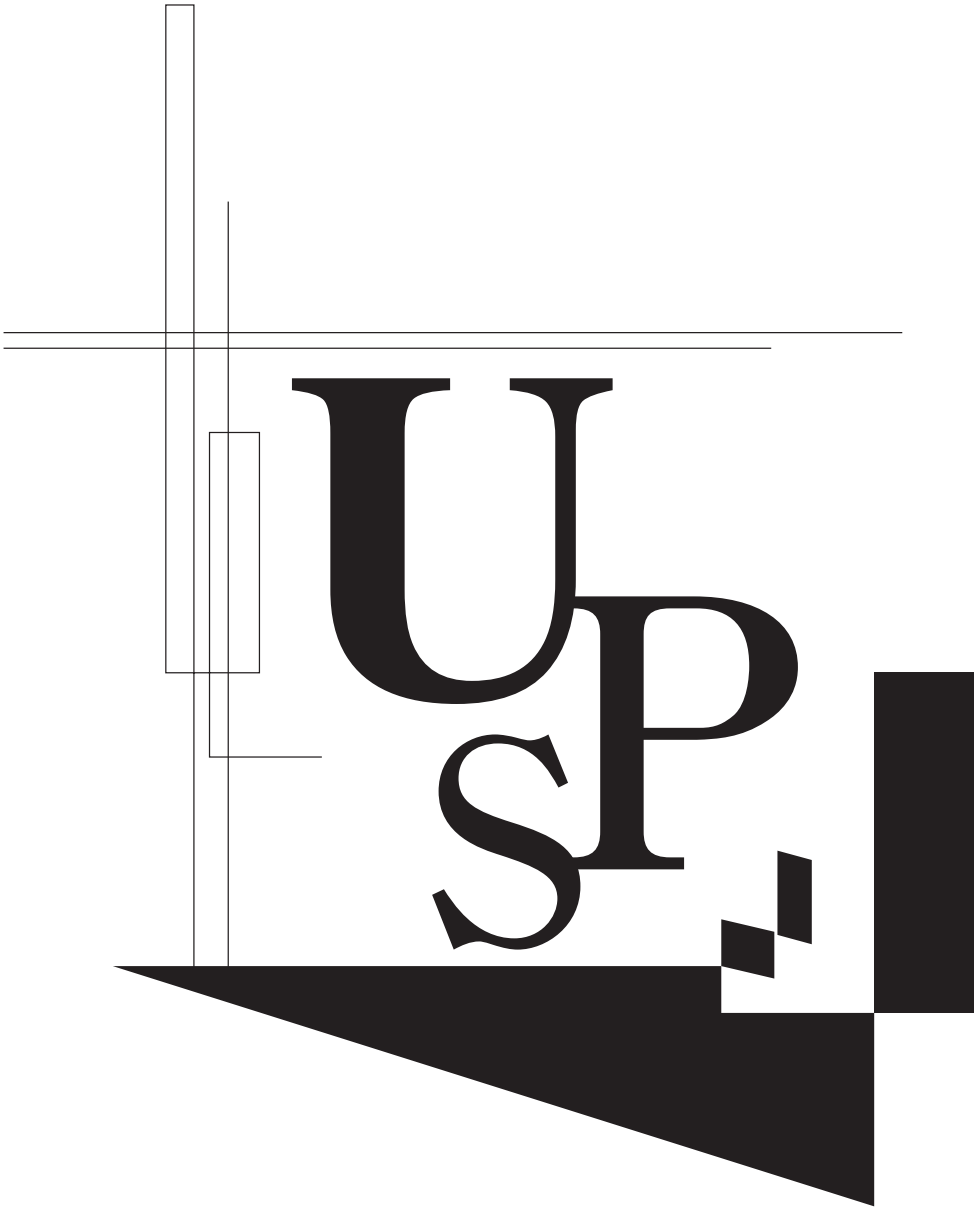

OMRON SOCIAL SOLUTIONS CO.,LTD.

K1L-D-05095L